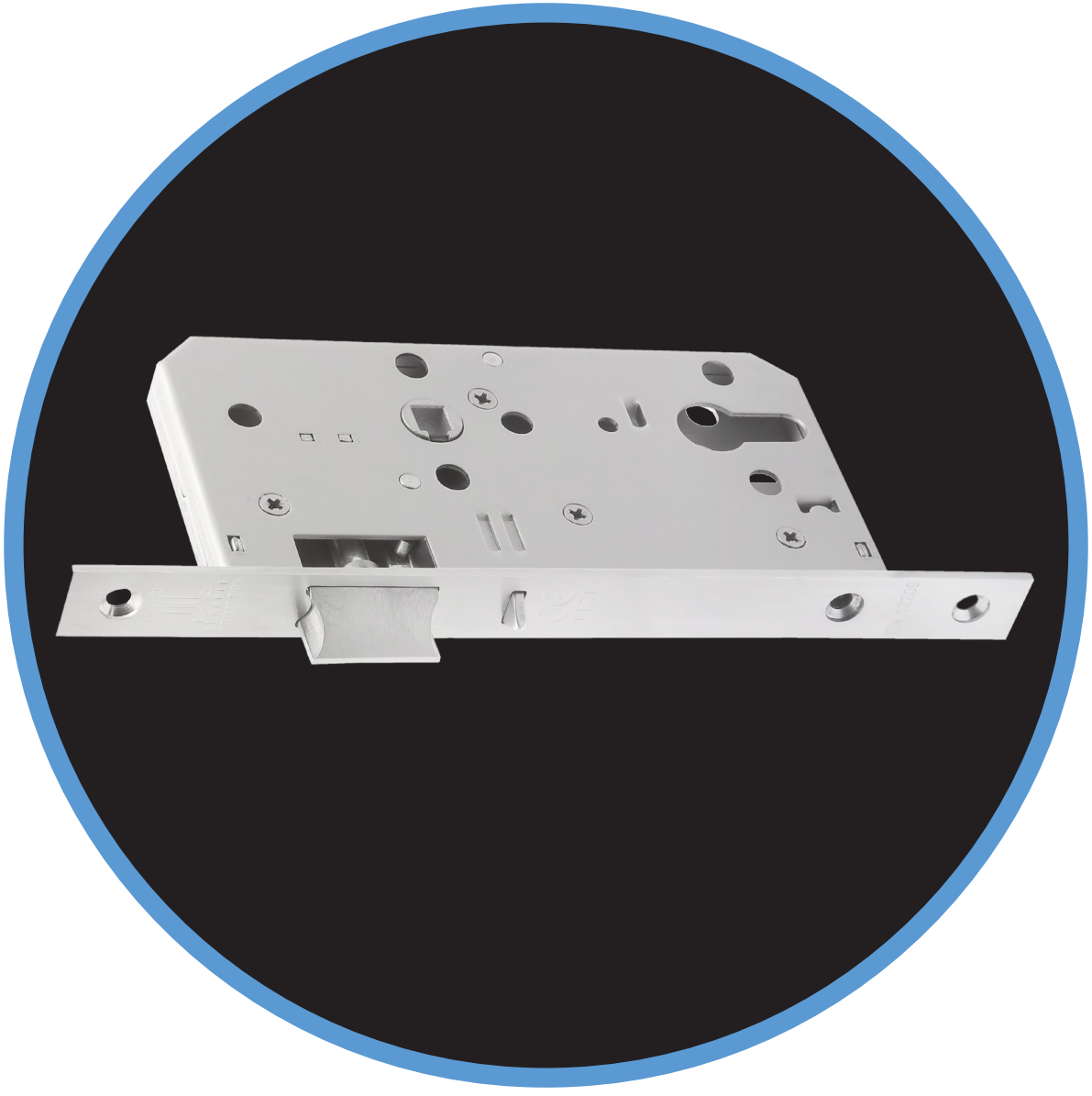

MORTISE LOCKS

ITEM CODE: S-XX72 SERIES
MORTISE SASHLOCK

BS EN 12209

Features:

- Area of application: for single rebated or flush wooden and metal doors.
- Material: forend, latchbolt and deadbolt in stainless steel EN 1.4301 (type SUS304), optional in EN 1.4401 (type SUS316).
- Lockcase or closure: pierced to accept Europrofile cylinder and 38 mm bolt through centres for fixing lever and cylinders roses. Bolt holes in vertical alignment for fixing backplate furniture. 1.5 mm thickness of cold-rolled hot dipped galvanized sheet with dimension size: depth 84 x height 165 mm x 15 mm for S-5572.
- Deadbolt: double throw 2 x 10 mm.
- Forend: Standard width 20 mm, thickness 3 mm, optional 24 mm. Standard square edges, optional round.
- Latchbolt: convex shape, withdrawn by key.
- Lever follower: 8 mm square, anti-rattle function.
- Centre to centre: 72 mm.
- Standard backset: 55 mm, optional 40, 45, 50, 60, 65, 70, 80 mm. 90 and 100mm are also available (not CE MARKED).
- Function: Latchbolt operated by key, lever handle or turn knob from either side. Deadbolt operated by key from either side using a double cylinder or by key outside and thumb turn inside.
- Handing: reversible at site (right or left).
- Supplied with: 1 pc mortise sashlock, 1 pc flanged striking plate, 2 pcs pockets, 5 pcs countersunk flat head wood screws (2 pcs x dia. 4.8 x 25 mm + 3 pcs x dia. 3.5 x 16 mm) and 5 pcs countersunk flat head machine screws (2 pcs x M5 x 12 mm + 3 pcs x M4 x 12 mm).
- Meets dimensional recommendations of BS8300 and ADM (Approved Document M) for locks.
- Tested successfully and confirming to BS EN 1634-1 and BS EN 12209:2003/AC 2005.
- CE marked by Exova Warrington.
- CERTIFIRE: Approved product, Certificate No. CF 5736
- Certificate of Constancy of Performance # 1121-CPR-AG5169 & # 2812-CPR-AG5169
- DoP (Declaration of Performance) is available on website or on request.
- Standard finish: Satin Stainless Steel (SSS).
- Other finishes are available upon request.
- Lock classification: 3-X-8-1-0-G-3-B-C-2-0

MORTISE LOCKS

Mortise sashlock S-5572	Mortise sashlock S-5572 dimensions
	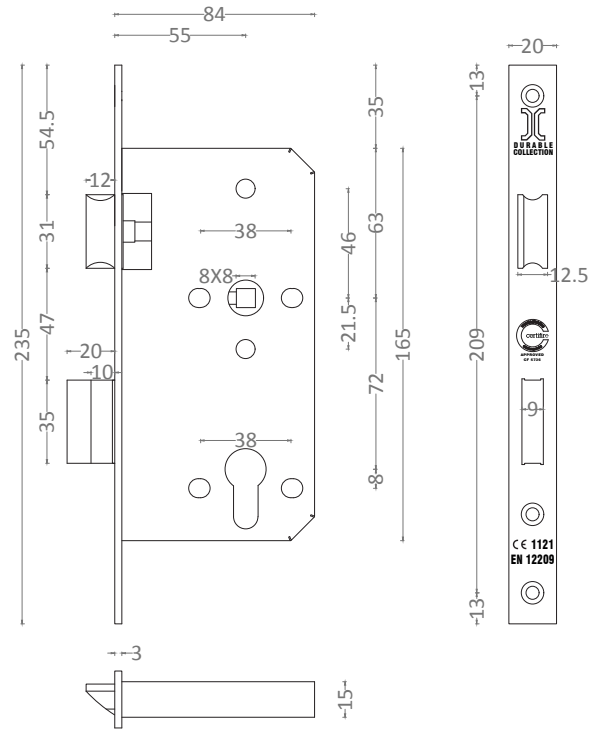
Intumescent seal suits lock dimensions and shapes-optional	**Striking plate and pocket dimensions for mortise sashlock S-5572**
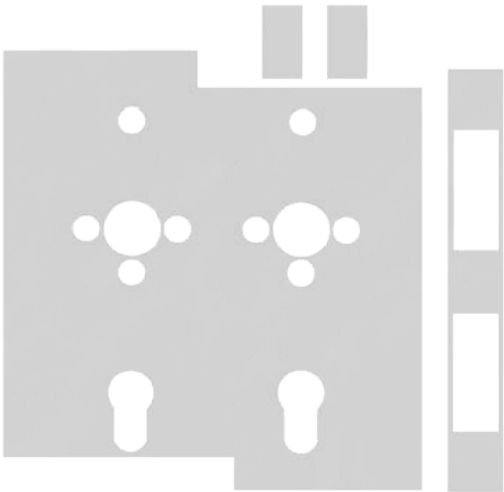	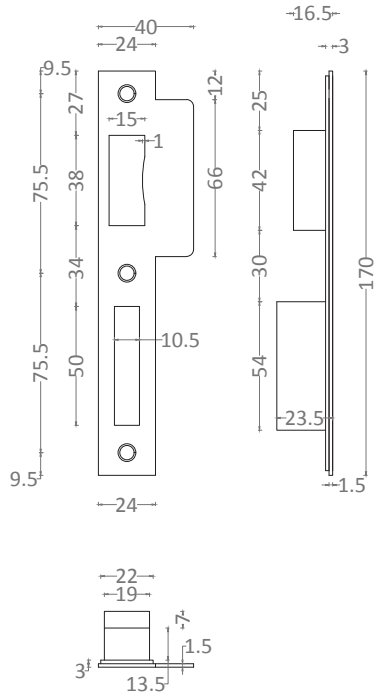

MORTISE LOCKS

ITEM CODE: S-XX85 SERIES
MORTISE SASHLOCK

BS EN 12209

Features:

- Area of application: for single rebated or flush wooden and metal doors.
- Material: forend, latchbolt and deadbolt in stainless steel EN 1.4301 (type SUS304), optional in EN 1.4401 (type SUS316).
- Lockcase or closure: pierced to accept Europrofile cylinder and 38 mm bolt through centers for fixing lever and cylinders roses. Bolt holes in vertical alignment for fixing backplate furniture. 1.5 mm thickness of cold-rolled hot dipped galvanized sheet with dimension size: depth 89 x height 170 mm x 15 mm for S-6085.
- Deadbolt: double throw 2 x 10 mm.
- Forend: Standard width 20 mm, thickness 3 mm, optional 24 mm. Standard square edges, optional round.
- Latchbolt: convex shape, withdrawn by key.
- Lever follower: 8 mm square, anti-rattle function.
- Center to center: 85 mm.
- Standard backset: 60 mm, optional 40, 45 and 55 mm.
- Function: Latchbolt operated by key, lever handle or turn knob from either side. Deadbolt operated by key from either side using a double cylinder or by key outside and thumb turn inside.
- Handing: reversible at site (right or left).
- Supplied with: 1 pc mortise sashlock, 1 pc flanged striking plate, 2 pcs pockets, 5 pcs countersunk flat head wood screws (2 pcs x dia. 4.8 x 25 mm + 3 pcs x dia. 3.5 x 16 mm) and 5 pcs countersunk flat head machine screws (2 pcs x M5 x 12 mm + 3 pcs x M4 x 12 mm).
- Meets dimensional recommendations of BS8300 and ADM (Approved Document M) for locks.
- Tested successfully and confirming to BS EN 1634-1 and BS EN 12209:2003/AC 2005.
- CE marked by Exova Warrington.
- CERTIFIRE: Approved product, Certificate No. CF 5736
- Certificate of Constancy of Performance # 1121-CPR-AG5169 & # 2812-CPR-AG5169
- DoP (Declaration of Performance) is available on website or on request.
- Standard finish: Satin Stainless Steel (SSS).
- Other finishes are available upon request.
- Optional: Intumescent fire protection kit for wood doors.
- Lock classification: 3-X-8-1-0-G-3--B-C-2-0

MORTISE LOCKS

Mortise sashlock S-6085	Mortise sashlock S-6085 dimensions
	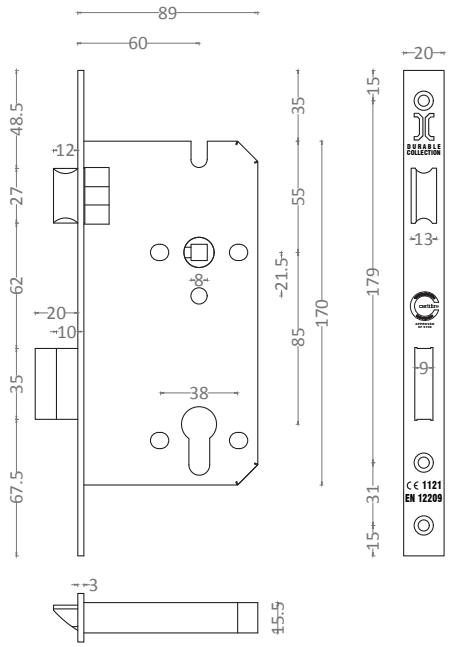
Intumescent seal suits lock dimensions and shapes- optional	**Striking plate and pocket dimensions for mortise sashlock S-6085**
	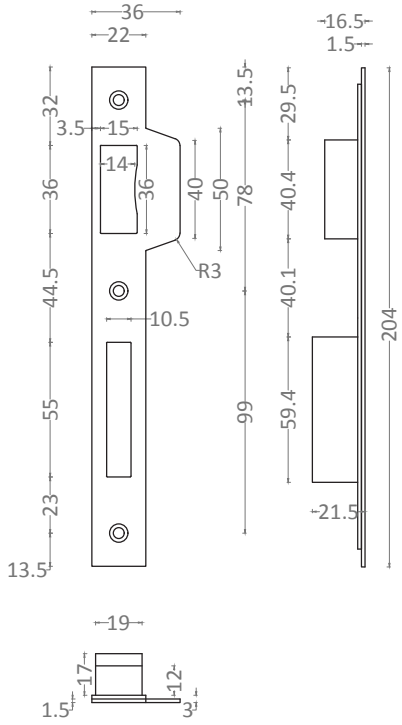

MORTISE LOCKS

ITEM CODE: N-XX72 SERIES
MORTISE NIGHTLATCH

BS EN 12209

Features:

- Area of application: for single rebated or flush wooden and metal doors.
- Material: forend and latchbolt in stainless steel EN 1.4301 (type SUS304), optional in EN 1.4401 (type SUS316).
- Lockcase or closure: pierced to accept Europrofile cylinder and 38 mm bolt through centres for fixing lever and cylinders roses. Bolt holes in vertical alignment for fixing backplate furniture. 1.5 mm thickness of cold-rolled hot dipped galvanized sheet with dimension size: depth 84 x height 165 mm x 15 mm for N-5572.
- Forend: Standard width 20 mm, thickness 3 mm, optional 24 mm. Standard square edges, optional round.
- Latchbolt: convex shape, withdrawn by key.
- Lever follower: 8 mm square, anti-rattle function.
- Centre to centre: 72 mm.
- Standard backset: 55 mm, optional 45, 50, and 60 mm.
- Function: latchbolt operated by lever handle or turn knob from either side. Double cylinder or key with turn withdraws latchbolt from either side. When door is shut the latchbolt is locked against end pressure due to anti-thrust latch below latchbolt.
- Handing: reversible at site (right or left).
- Supplied with: 1 pc mortise nightlatch, 1 pc flanged striking plate with curved lipping, 1 pc pocket, 4 pcs countersunk flat head wood screws (2 pcs x dia. 4.8 x 25 mm + 2 pcs x dia. 3.5 x 16 mm) and 4 pcs countersunk flat head machine screws (2 pcs x M5 x 12 mm + 2 pcs x M4 x 12 mm).
- Meets dimensional recommendations of BS8300 and ADM (Approved Document M) for locks.
- Tested successfully and confirming to BS EN 1634-1 and BS EN 12209:2003/AC 2005.
- CE marked by Exova Warrington.
- CERTIFIRE: Approved product, Certificate No. CF 5736.
- Certificate of Constancy of Performance # 1121-CPR-AG5169 & # 2812-CPR-AG5169.
- DoP (Declaration of Performance) is available on website or on request.
- Standard finish: Satin Stainless Steel (SSS).
- Other finishes are available upon request.
- Optional: Intumescent fire protection kit for wood doors.
- Lock classification: 3-X-8-1-0-G-1-B-B-2-0

MORTISE LOCKS

Mortise nightlatch N-5572	Mortise nightlatch N-5572 dimensions
	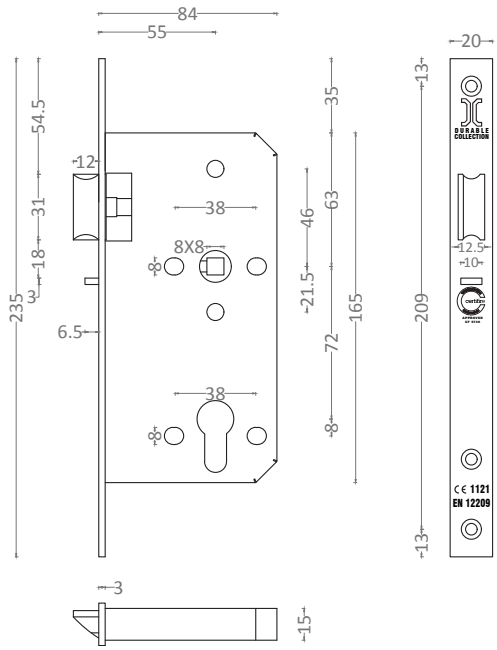
Intumescent seal suits lock dimensions and shapes- optional	**Striking plate and pocket dimensions for mortise nightlatch N-5572**
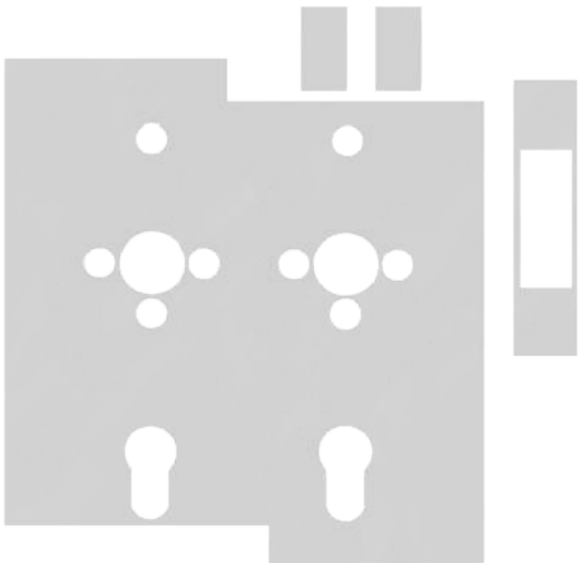	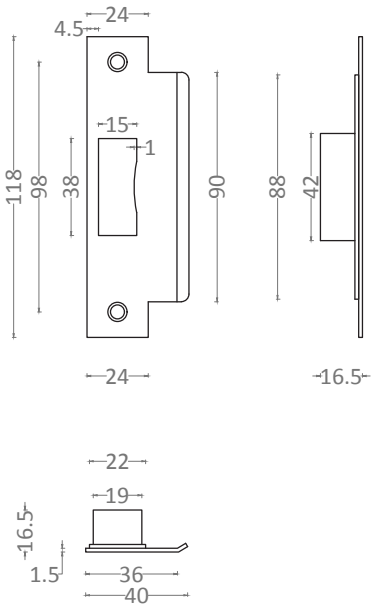

MORTISE LOCKS

ITEM CODE: L-XX72 SERIES
MORTISE LATCHLOCK

BS EN 12209

Features:

- Area of application: for single rebated or flush wooden and metal doors.
- Material: forend and latchbolt in stainless steel EN 1.4301 (type SUS304), optional in EN 1.4401 (type SUS316).
- Lockcase or closure: pierced to accept 8 mm square spindle and 38mm bolt through centres for fixing lever handles or thumb turn roses. 1.5 mm thickness of cold-rolled hot dipped galvanized sheet with dimension size: depth 84 x height 165 mm x 15 mm for L-5572.
- Forend: Standard width 20 mm, thickness 3 mm, optional 24 mm. Standard square edges, optional round.
- Latchbolt: convex shape.
- Centre to centre: 72 mm.
- Lever follower: 8 mm square, anti-rattle function.
- Standard backset: 55 mm, optional 40, 45, 50, 60, 65, 70 and 80 mm.
- Function: latchbolt operated by using lever handle (L-XX72).
- Additional optional function: Latchbolt operated by single or double cylinder from either side (L-XX72N).
- Handing: reversible at site (right or left).
- Supplied with: 1 pc mortise latchlock, 1 pc flanged striking plate with curved lipping, 1 pc pocket, 4 pcs countersunk flat head wood screws (4 pcs x dia. 4.8 x 25 mm) and 4 pcs countersunk flat head machine screws (2 pcs x M5 x 12 + 2 pcs x M4 x 12).
- Meets dimensional recommendations of BS8300 and ADM (Approved Document M) for locks.
- Tested successfully and confirming to BS EN 1634-1 and BS EN 12209:2003/AC 2005.
- CE marked by Exova Warrington.
- CERTIFIRE: Approved product, Certificate No. CF 5736.
- Certificate of Constancy of Performance # 1121-CPR-AG5169 & # 2812-CPR-AG5169.
- DoP (Declaration of Performance) is available on website or on request.
- Standard finish: Satin Stainless Steel (SSS).
- Other finishes are available upon request.
- Optional: Intumescent fire protection kit for wood doors.
- Lock classification: 3-X-8-1-0-G-0-B-0-2-0

MORTISE LOCKS

Mortise latchlock L-5572	Mortise latchlock L-5572 dimensions
	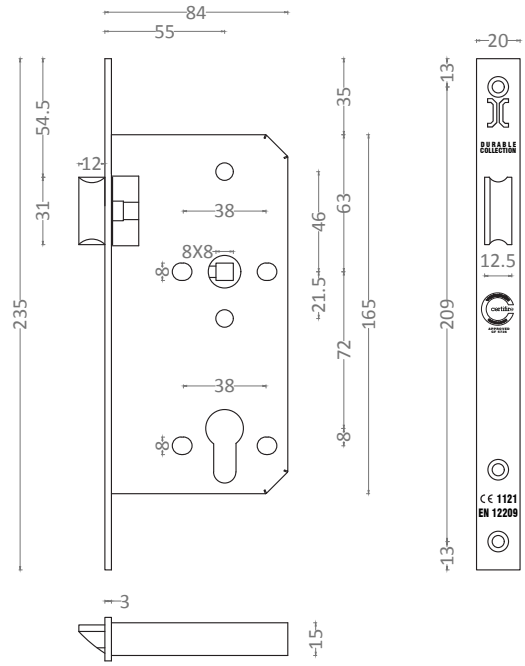
Intumescent seal suits lock dimensions and shapes- optional	**Striking plate and pocket dimensions for mortise latchlock L-5572**
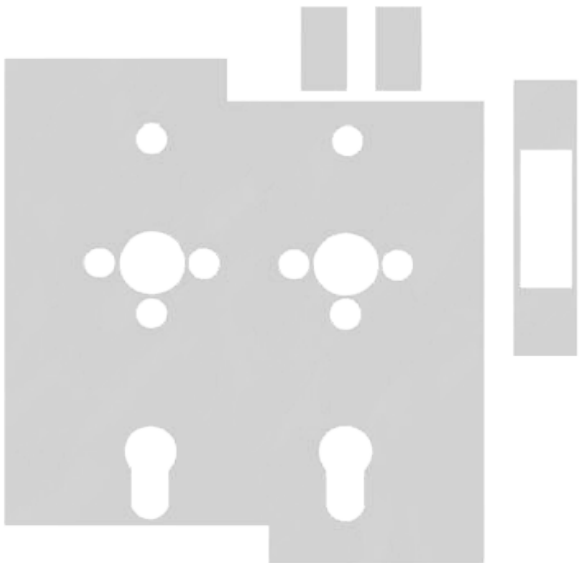	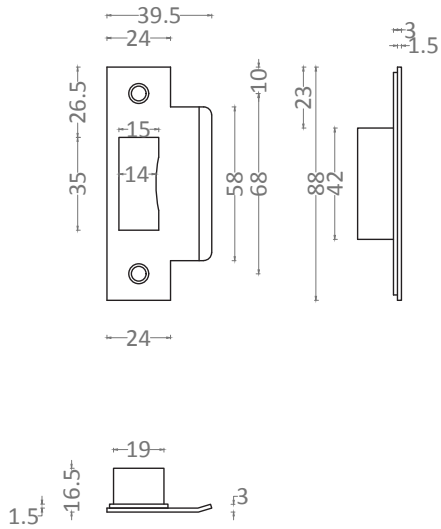

MORTISE LOCKS

ITEM CODE: D-XX72 SERIES
MORTISE DEADLOCK

BS EN 12209

Features:

- Area of application: for single rebated or flush wooden and metal doors.
- Material: forend and deadbolt in stainless steel EN 1.4301 (type SUS304), optional in EN 1.4401 (type SUS316).
- Lockcase or closure: pierced to accept Europrofile cylinder and 38mm bolt through centers for fixing cylinder roses, 1.5 mm thickness of cold-rolled hot dipped galvanized sheet with dimension size: depth 84 x height 165 mm x 15 mm for D-5572.
- Deadbolt: double throw 2 x 10 mm
- Forend: width 20 mm, thickness 3 mm, optional 24 mm. Standard square edges, optional round.
- Center to center: 72 mm
- Standard backset: 55 mm, optional 40, 45, 50, 60, 65, 70 and 80 mm
- Function: deadbolt operated by key from either side using a double cylinder or by single cylinder and turn.
- Supplied with: 1 pc mortise deadlock, 1 pc striking plate, 1 pc pocket, 4 pcs countersunk flat head wood screws (4 pcs x dia. 4.8 x 25 mm) and 4 pcs countersunk flat head machine screws (2 pcs x M5 x 12 + 2 pcs x M4 x 12).
- Meets dimensional recommendations of BS8300 and ADM (Approved Document M) for locks.
- Tested successfully and confirming to BS EN 1634-1 and BS EN 12209:2003/AC 2005.
- CE marked by Exova Warrington.
- CERTIFIRE: Approved product, Certificate No. CF 5736.
- Certificate of Constancy of Performance # 1121-CPR-AG5168 & # 2812-CPR-AG5168.
- DoP (Declaration of Performance) is available on website or on request.
- Standard finish: Satin Stainless Steel (SSS).
- Other finishes are available upon request.
- Optional: Intumescent fire protection kit for wood doors.
- Lock classification: 3-X-8-1-0-G-3-B-C-0-0

MORTISE LOCKS

Mortise Deadlock D-5572	Mortise Deadlock D-5572 dimensions
	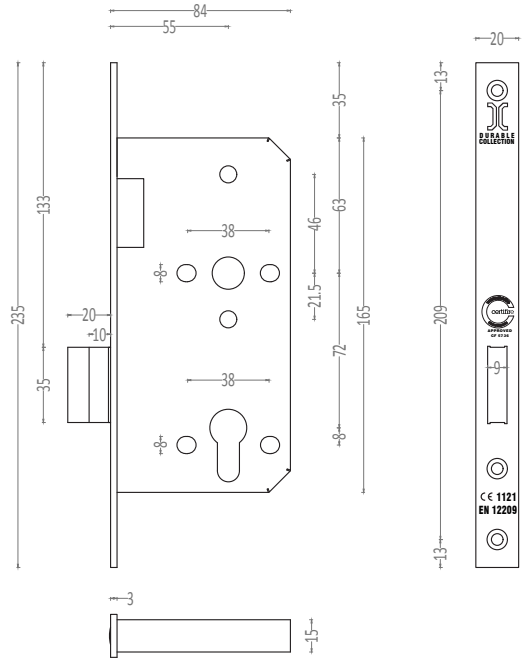
Intumescent seal suits lock dimensions and shapes- optional	**Striking plate and pocket dimensions for mortise deadlock D-5572**
	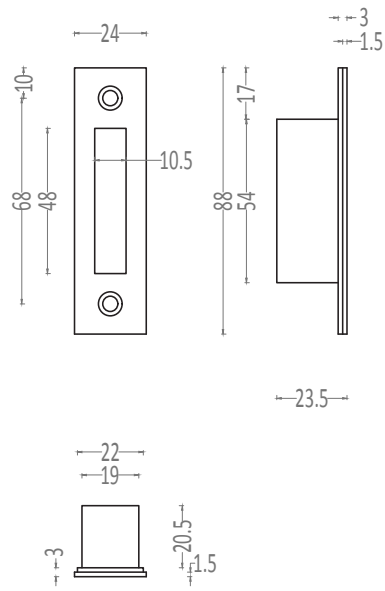

MORTISE LOCKS

ITEM CODE: B-XX78 SERIES
MORTISE BATHROOM LOCK

BS EN 12209

Features:

- Area of application: for single rebated or flush wooden and metal doors.
- Material: forend, latchbolt and deadbolt in stainless steel EN 1.4301 (type SUS304), optional in EN 1.4401 (type SUS316).
- Lockcase or closure: pierced to accept 8 mm square spindle for lever and turn & indicator and 38 mm bolt through centres for fixing lever and cylinders roses. Bolt holes in vertical alignment for fixing backplate furniture. 1.5 mm thickness of cold-rolled hot dipped galvanized sheet with dimension size: depth 84 x height 165 mm x 15 mm for B-5578.
- Deadbolt: Single throw 1 x 20 mm, built in 90° stop position for turn to eliminate overthrow of bathroom turns.
- Forend: width 20 mm, thickness 3 mm, optional 24 mm. Standard square edges, optional round.
- Latchbolt: convex shape.
- Lever follower: 8 mm square, anti-rattle function.
- Centre to centre: 78 mm.
- Standard backset: 55 mm, optional 50, 60 and 65 mm
- Function: latchbolt operated by lever handle from either side. Deadbolt operated by turn from either side.
- Handing: reversible at site (right or left).
- Supplied with: 1 pc mortise bathroom lock, 1 pc flanged striking plate, 2 pcs pockets, 5 pcs countersunk flat head wood screws (2 pcs x dia. 4.8 x 25 mm + 3 pcs x dia. 3.5 x 16 mm) and 5 pcs countersunk flat head machine screws (2 pcs x M5 x 12 mm + 3 pcs x M4 x 12 mm).
- Meets dimensional recommendations of BS8300 and ADM (Approved Document M) for locks.
- Tested successfully and confirming to BS EN 1634-1 and BS EN 12209:2003/AC 2005.
- CE marked by Exova Warrington.
- CERTIFIRE: Approved product, Certificate No. CF 5736.
- Certificate of Constancy of Performance # 1121-CPR-AG5169 & # 2812-CPR-AG5169.
- DoP (Declaration of Performance) is available on website or on request.
- Standard finish: Satin Stainless Steel (SSS).
- Other finishes are available upon request.
- Optional: Intumescent fire protection kit for wood doors.
- Lock classification: 3-X-8-1-0-G-0-B-G-2-0

MORTISE LOCKS

Mortise bathroom lock B-5578	Mortise bathroom lock B-5578 dimensions
	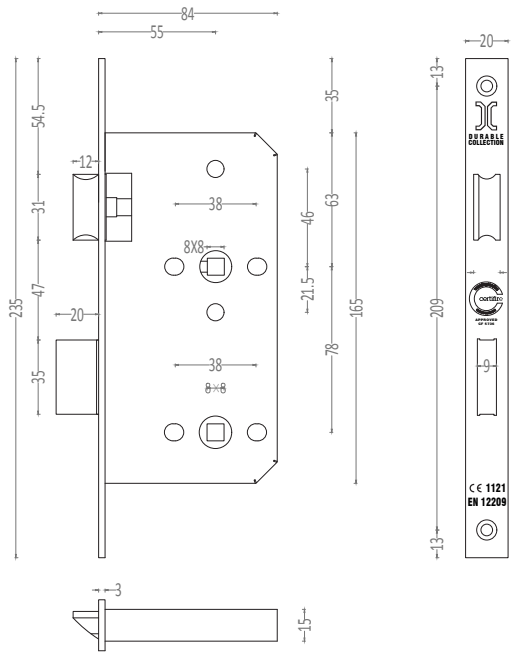
Intumescent seal suits lock dimensions and shapes- optional	**Striking plate and pocket dimensions for mortise bathroom lock B-5578**
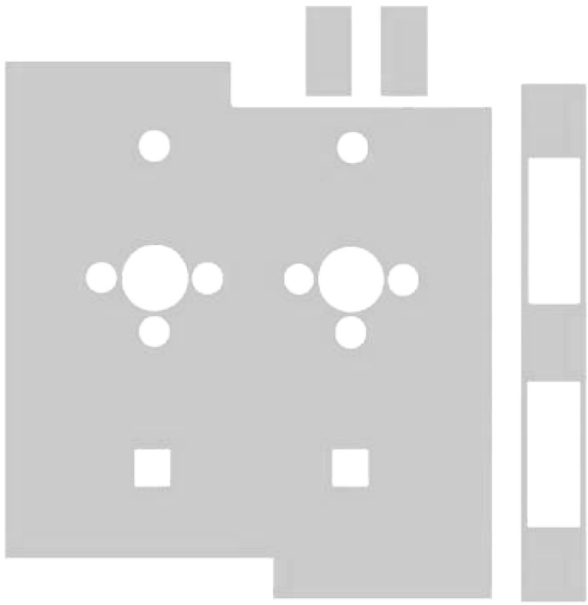	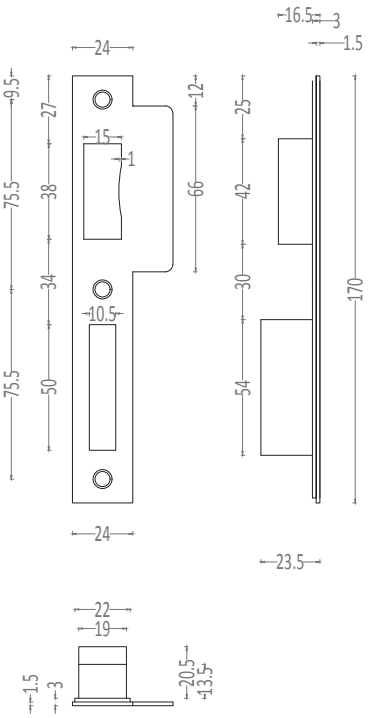

MORTISE LOCKS

ITEM CODE: L-5572 CR & L-8072 CR

MORTISE CLASSROOM LOCK

Features:

- Area of application: for single rebated or flush wooden and metal doors.
- Material: forend, latchbolt and anti-thrust bolt in stainless steel EN 1.4301 (type SUS304), optional in EN 1.4401 (type SUS316).
- Lockcase or closure: pierced to accept Europrofile cylinder and 38 mm bolt through centres for fixing lever and cylinders roses. Bolt holes in vertical alignment for fixing backplate furniture. 1.5 mm thickness of cold-rolled hot dipped galvanized sheet with dimension size: depth 84 x height 165 mm x 15 mm for L-5572 CR.
- Forend: width 20 mm, thickness 3 mm, optional 24 mm. Standard square edges, optional round.
- Latchbolt: convex shape.
- Lever follower: 8 mm square split follower.
- Centre to centre: 72 mm.
- Standard backset: 55 and 80 mm.
- Function: latchbolt operated by lever handle or turn knob from either side except when the outside turn knob/lever is locked by outside key or thumbturn. Inside turn knob/lever is always free to egress. When door is shut the latchbolt is locked against end pressure due to anti-thrust latch below latchbolt. Optional without anti-thrust latch.
- Handing: Reversible a site (but the outside key will lock one side only of outside turn knob/lever). Check chart below:

DIN LEFT HAND DOOR/OUTSWING/REQUIRES DIN LEFT HAND CLASSROOM	DIN LEFT HAND DOOR/INSWING/REQUIRES DIN RIGHT HAND CLASSROOM/TO REVERSE LATCHBOLT
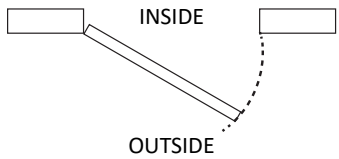	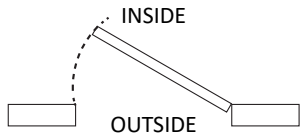
DIN RIGHT HAND DOOR/OUTSWING/REQUIRES DIN RIGHT HAND CLASSROOM	**DIN RIGHT HAND DOOR/INSWING/REQUIRES DIN LEFT HAND CLASSROOM/TO REVERSE LATCHBOLT**
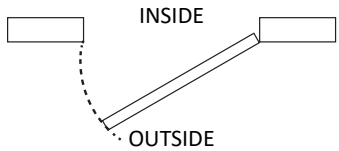	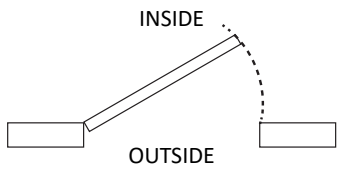

- Supplied with: 1 pc mortise classroom lock, 1 pc flanged striking plate with curved lipping, 1 pc pocket, 1 split spindle (8 mm square), 4 pcs countersunk flat head wood screws (2 pcs x dia. 4.7 x 25 mm + 2 pcs x dia. 3.5 x 16 mm) and 4 pcs countersunk flat head machine screws (2 pcs x M5 x 12 + 2 pcs x M4 x 12).
- Meets dimensional recommendations of BS8300 and ADM (Approved Document M) for locks.
- Standard finish: Satin Stainless Steel (SSS). Other finishes are available upon request.

MORTISE LOCKS

Mortise classroom lock L-5572 CR (photo below is showing left hand lock according to BS EN 12519:2004)	Mortise classroom lock L-5572 CR dimensions (drawing below is showing left hand lock according to BS EN 12519:2004)
	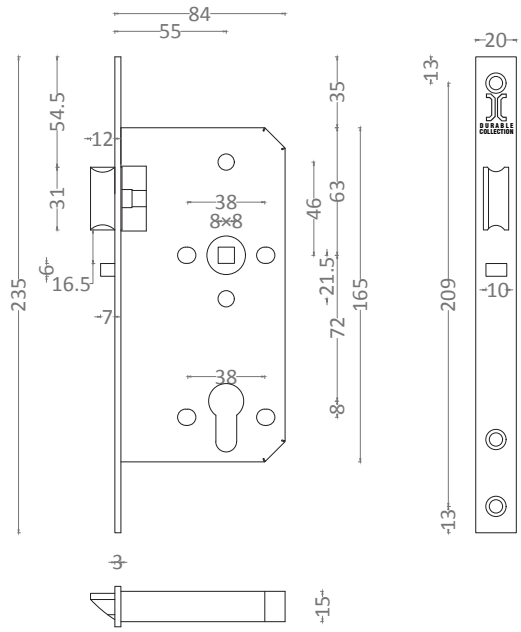
Intumescent seal suits lock dimensions and shapes- optional	**Striking plate and pocket dimensions for mortise classroom lock L-5572 CR**
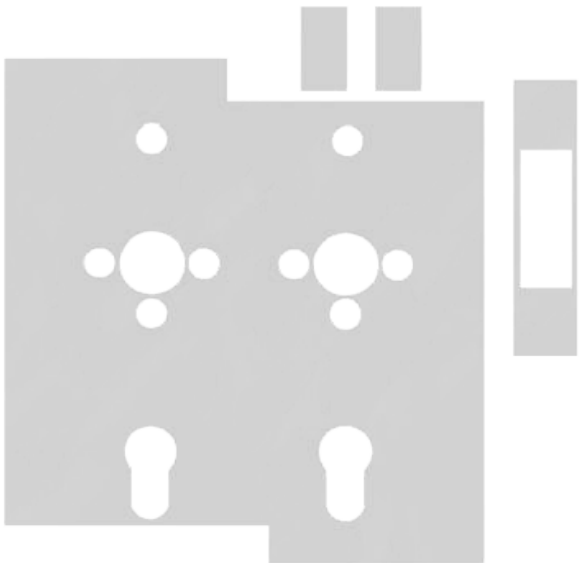	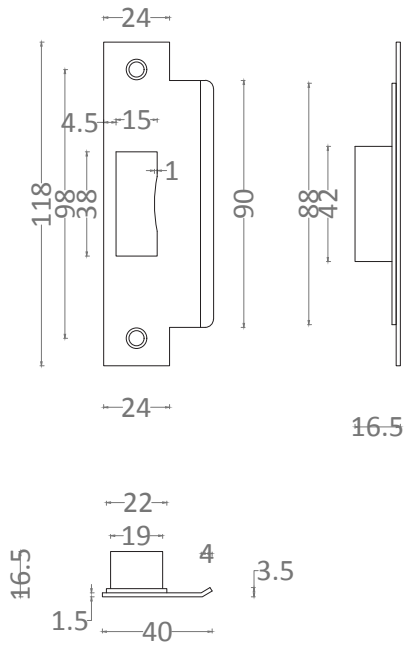

MORTISE LOCKS

ITEM CODE: D-55XX & D-65XX
MORTISE DEADLOCK

BS EN 12209

Features:

- Area of application: for single rebated or flush wooden and metal doors.
- Material: forend and deadbolt in stainless steel EN 1.4301 (type SUS304), optional in EN 1.4401 (type SUS316).
- Lockcase or closure: pierced to accept Europrofile cylinder and 38mm bolt through centres for fixing cylinder roses, 1.5 mm thickness of cold-rolled hot dipped galvanized sheet with dimension size: depth 84 x height 95 mm x 15 mm for D-55XX.
- Deadbolt: double throw 2 x 10 mm
- Forend: width 20 mm, thickness 3 mm, optional 24 mm. Standard square edges, optional round.
- Standard backset: 55 mm & 65 (not CE marked).
- Function: deadbolt operated by key from either side using a double cylinder or by single cylinder and turn.
- Supplied with: 1 pc mortise deadlock, 1 pc striking plate, 1 pc pocket, 4 pcs countersunk flat head wood screws (4 pcs x dia. 4.8 x 25 mm) and 4 pcs countersunk flat head machine screws (2 pcs x M5 x 12 + 2 pcs x M4 x 12).
- Tested successfully and confirming to BS EN 1634-1 and BS EN 12209:2003/AC 2005
- CE marked by Exova Warrington.
- CERTIFIRE: Approved product, Certificate No. CF 5736
- Certificate of Constancy of Performance # 1121-CPR-AG5168 & # 2812-CPR-AG5168
- DoP (Declaration of Performance) is available on website or on request.
- Standard finish: Satin Stainless Steel (SSS).
- Other finishes are available upon request.
- Optional: Intumescent fire protection kit for wood doors.
- Lock classification: 3-X-8-1-0-G-3-B-C-0-0

MORTISE LOCKS

Mortise deadlock D-55XX	Mortise deadlock D-55XX dimensions
	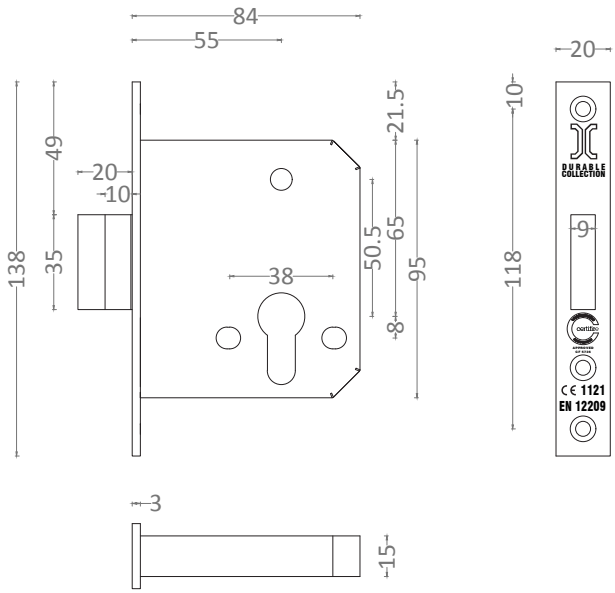
Intumescent seal suits lock dimensions and shapes- optional	**Striking plate and pocket dimensions for mortise deadlock D-55XX**
	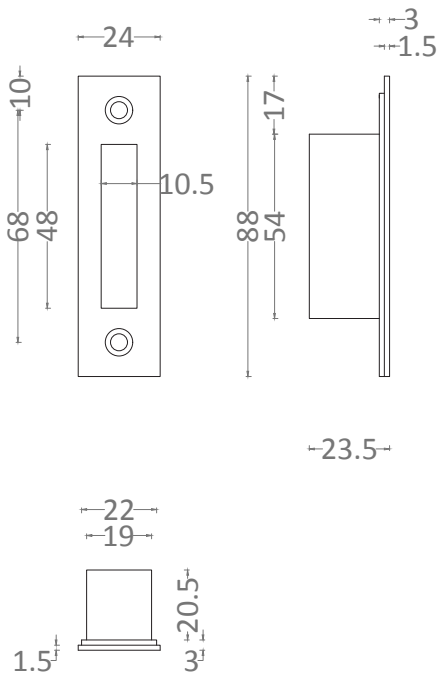

MORTISE LOCKS

ITEM CODE: D-45XXWC & D-55XXWC
MORTISE DEADLOCK

Features:

- Area of application: for single rebated or flush wooden and metal doors.
- Material: forend and deadbolt in stainless steel EN 1.4301 (type SUS304), optional in EN 1.4401 (type SUS316).
- Lockcase or closure: pierced to accept 8 mm square spindle for lever and turn & indicator, 1.5 mm thickness of cold-rolled hot dipped galvanized sheet with dimension size: depth 64 x height 95 mm x 15 mm for D-45XXWC.
- Deadbolt: Single throw 20 mm.
- Forend: Standard width 20 mm, thickness 3 mm, optional 22, 23 and 24 mm. Standard square edges, optional round.
- Standard backset: 45 mm. Optional 35, 55 mm.
- Function: deadbolt operated by turn or lever handle.
- Supplied with: 1 pc mortice deadlock, 1 pc striking plate, 1 pc pocket, 4 pcs countersunk flat head wood screws (4 pcs x dia. 4.8 x 25 mm) and 4 pcs countersunk flat head machine screws (2 pcs x M5 x 12 + 2 pcs x M4 x 12).
- Standard finish: Satin Stainless Steel (SSS). Other finishes are available upon request.



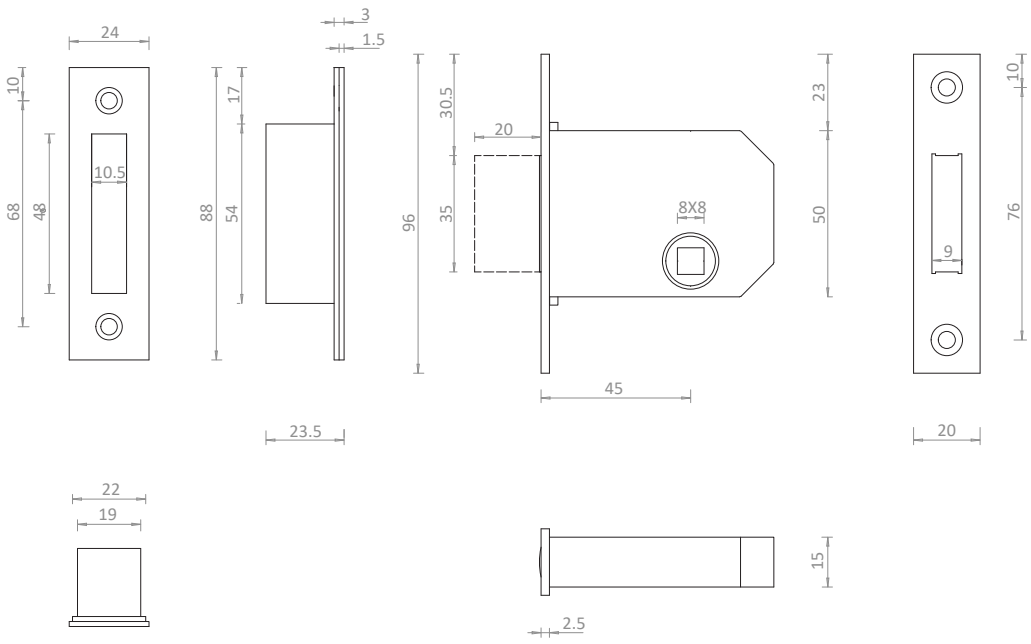

MORTISE LOCKS

ITEM CODE: L-55XX
MORTISE LATCHLOCK

BS EN 12209

Features:

- Area of application: for single rebated or flush wooden and metal doors.
- Material: forend and latchbolt in stainless steel EN 1.4301 (type SUS304), optional in EN 1.4401 (type SUS316).
- Lockcase or closure: pierced to accept 8 mm square spindle and 38mm bolt through centres for fixing lever handles or thumb turn roses. 1.5 mm thickness of cold-rolled hot dipped galvanized sheet with dimension size: depth 84 x height 86 mm x 15 mm.
- Forend: width 20 mm, thickness 3 mm, optional 24 mm. Standard square edges, optional round.
- Latchbolt: convex shape.
- Lever follower: 8 mm square, anti-rattle function.
- Standard backset: 55 mm.
- Function: Latchbolt operated by using lever handle or turn knob or cylinder from either side.
- Handing: reversible at site (right or left).
- Supplied with: 1 pc mortise latchlock, 1 pc flanged striking plate with curved lipping, 1 pc pocket, 4 pcs countersunk flat head wood screws (4 pcs x dia. 4.8 x 25 mm) and 4 pcs countersunk flat head machine screws (2 pcs x M5 x 12 + 2 pcs x M4 x 12).
- Tested successfully and confirming to BS EN 1634-1 and BS EN 12209:2003/AC 2005
- CE marked by Exova Warrington.
- CERTIFIRE: Approved product, Certificate No. CF 5736
- Certificate of Constancy of Performance # 1121-CPR-AG5169 & # 2812-CPR-AG5169
- DoP (Declaration of Performance) is available on website or on request.
- Standard finish: Satin Stainless Steel (SSS).
- Other finishes are available upon request.
- Optional: Intumescent fire protection kit for wood doors.
- Lock classification: 3-X-8-1-0-G-0-B-0-2-0

MORTISE LOCKS

Mortise latchlock L-55XX	Mortise latchlock L-55XX dimensions
	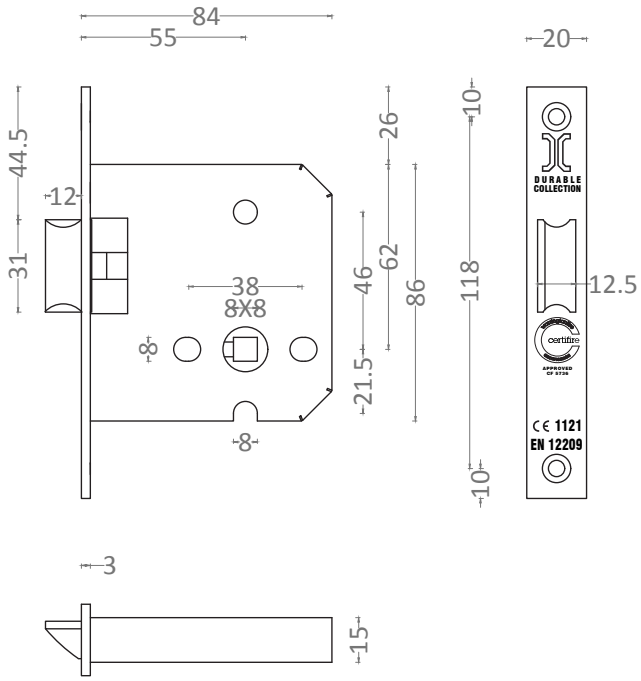
Intumescent seal suits lock dimensions and shapes- optional	**Striking plate and pocket dimensions for mortise latchlock L-55XX**
	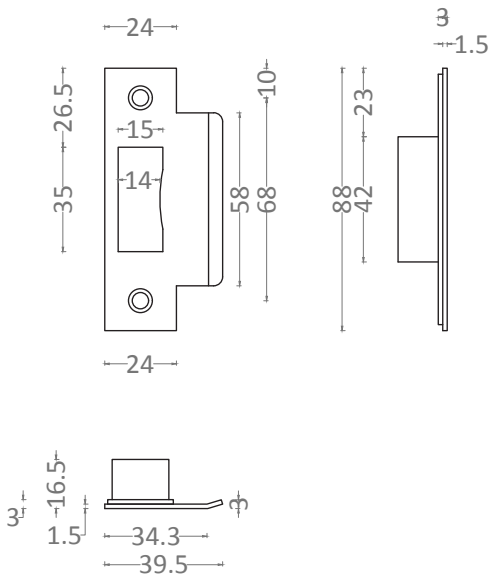

MORTISE LOCKS

ITEM CODE: S-5072 PANIC SERIES
MORTISE PANIC LOCK

Features:

- Area of application: for single rebated or flush wooden and metal doors.
- Material: forend, latchbolt, anti-thrust and deadbolt in stainless steel EN 1.4301 (type SUS304), optional in EN 1.4401 (type SUS316).
- Lockcase or closure: pierced to accept Europrofile cylinder and 38 mm bolt through centres for fixing lever and cylinders roses. Bolt holes in vertical alignment for fixing backplate furniture. 1.5 mm thickness of cold-rolled hot dipped galvanized sheet with dimension size: depth 88 x height 165 mm x 15.5 mm for S-5572 PANIC.
- Deadbolt: single throw 1 x 20 mm.
- Forend: width 20 mm, thickness 3 mm, optional 24 mm. Standard square edges, optional round.
- Latchbolt: convex shape, withdrawn by key.
- Lever follower: 8 mm square, anti-rattle function.
- centre to centre: 72 mm.
- Standard backset: 55 mm, optional 60 mm.
- Function: latchbolt operated by key or turn knob/lever from inside. A blind plate or knob is mounted on the outside and the door can be opened from outside by key. Conventional panic function from inside. Deadbolt and latch bolt will be retracted by using turn knob/ lever, touch bar or key from inside. Automatic deadlocking (every time the door is shut it is deadlocked).
- Handing: non-reversible at site, (DIN right or DIN left should be specified while ordering).
- Supplied with: 1 pc mortise panic lock, 1 pc flanged striking plate with curved lipping, 2 pcs pockets, 5 pcs countersunk flat head wood screws (2 pcs x dia. 4.8 x 25 mm + 3 pcs x dia. 3.5 x 16 mm) and 5 pcs countersunk flat head machine screws (2 pcs x M5 x 12 mm + 3 pcs x M4 x 12 mm).
- Meets dimensional recommendations of BS8300 and ADM (Approved Document M) for locks.
- Standard finish: Satin Stainless Steel (SSS).
- Other finishes are available upon request.

MORTISE LOCKS

Mortise panic lock S-5572 panic (photo below is showing left hand panic lock according to BS EN 12519:2004)	Mortise panic lock S-5572 panic dimension (drawing below is showing right hand panic lock according to BS EN 12519:2004)
	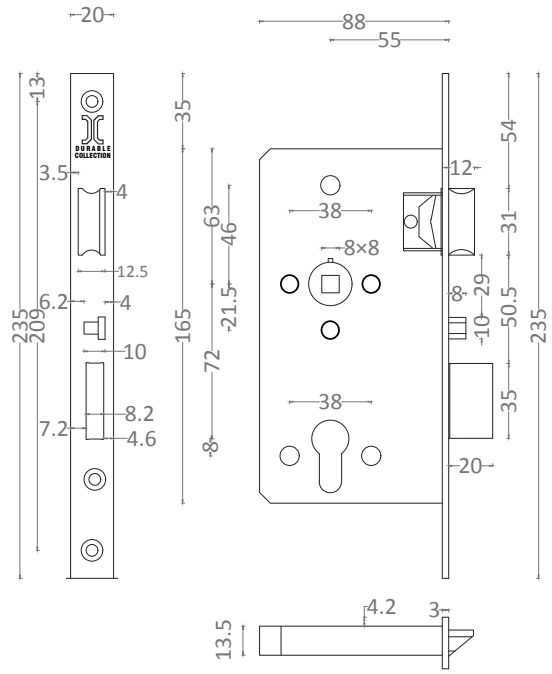
Intumescent seal suits lock dimensions and shapes- optional	**Striking plate and pocket dimensions for mortise panic lock S-5572 panic**
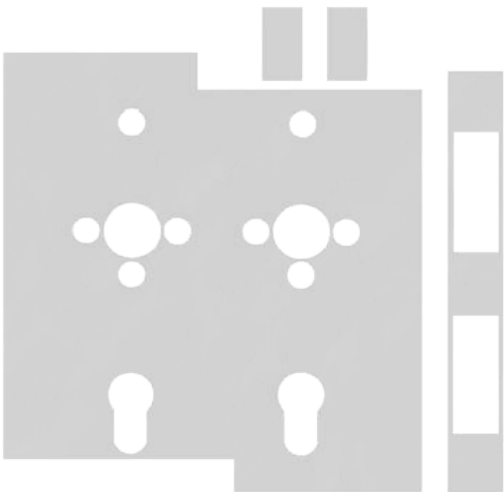	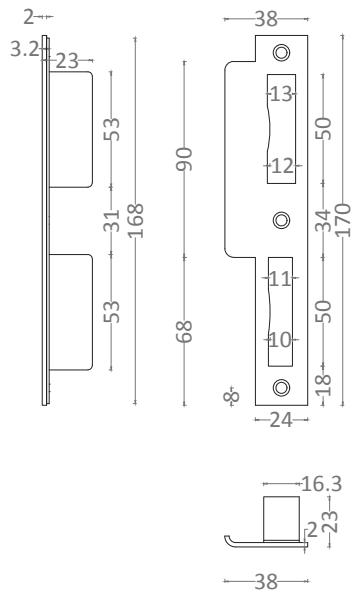

MORTISE LOCKS

ITEM CODE: P-XX72
MORTISE PANIC LOCK

CE EN 1634-1 EN 179



Features:

- Area of application: for single rebated or flush wooden and metal doors.
- Material: forend, latchbolt and deadbolt in stainless steel EN 1.4301 (type SUS304), optional in EN 1.4401 (type SUS316).
- Lockcase or closure: pierced to accept Europrofile cylinder and 38 mm bolt through centres for fixing lever and cylinders roses. Bolt holes in vertical alignment for fixing backplate furniture. 1.5 mm thickness of cold-rolled hot dipped galvanized sheet with dimension size: depth 90 x height 165 mm x 15 mm for P-6072.
- Deadbolt: single throw 1 x 20.5 mm.
- Forend: width 20 mm, thickness 3 mm, optional 24 mm. Standard square edges, optional round.
- Latchbolt: convex shape, withdrawn by key.
- Lever follower: 8 mm square, split.
- Centre to centre: 72 mm.
- Standard backset: 60 mm, optional 65 mm.
- Function: latchbolt operated by key or turn knob/lever from inside & outside. Operable knob/ lever handle from outside will retract the latchbolt, if locked from inside by key or turn, the outside lever handle cannot retract the deadbolt. Conventional panic function from inside. Deadbolt and latch bolt will be retracted by using turn knob/ lever, touch bar or key from inside.
- Handing: Reversible at site.
- Supplied with: 1 pc mortise panic lock, 1 pc striking plate with straight lipping, 1 pc pocket, 5 pcs countersunk flat head wood screws (2 pcs x dia. 4.8 x 25 mm + 3 pcs x dia. 3.5 x 16 mm) and 5 pcs countersunk flat head machine screws (2 pcs x M5 x 12 mm + 3 pcs x M4 x 12 mm).
- Certificate of Constancy of Performance # 2649-CPR-26002016
- Meets dimensional recommendations of BS8300 and ADM (Approved Document M) for locks.
- Fire rated to EN1634-1
- Standard finish: Satin Stainless Steel (SSS).
- Other finishes are available upon request.

MORTISE LOCKS

Mortise panic lock P-XX72	Mortise panic lock P-6072
	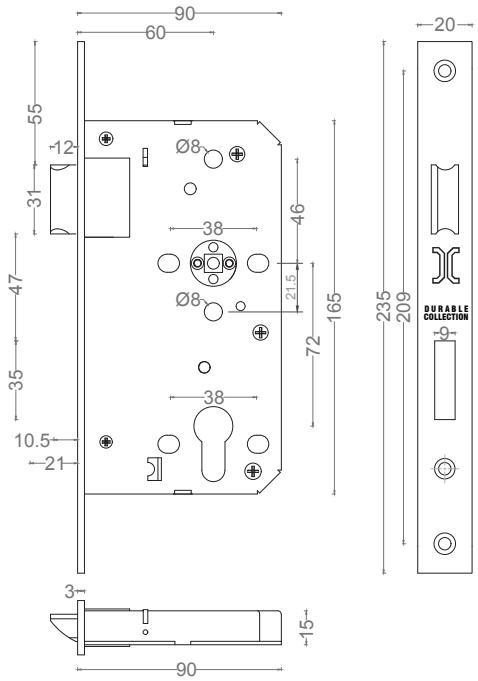
Intumescent seal suits lock dimensions and shapes- optional	**Striking plate and pocket dimensions for mortise panic lock P-6072**
	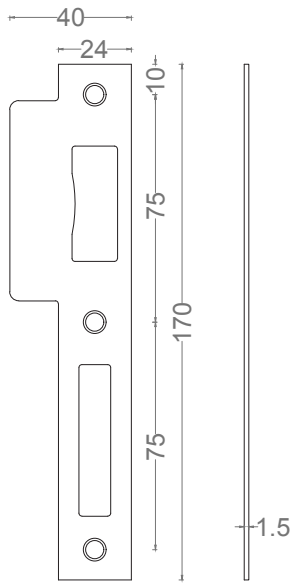

ITEM CODE: S-5085AS, S-6085AS & S-7085AS SERIES

MORTISE SECURITY SASHLOCK WITH 3 ANTI-SAW DEADBOLTS PROTECTION

Features:

- Area of application: for single rebated or flush wooden and metal doors.
- Material: forend, latchbolt and deadbolts in stainless steel EN 1.4301 (type SUS304), optional in EN 1.4401 (type SUS316).
- Lockcase or closure: pierced to accept Europrofile cylinder and 38 mm bolt through centres for fixing lever and cylinders roses. Bolt holes in vertical alignment for fixing backplate furniture. 1.5 mm thickness of cold-rolled hot dipped galvanized sheet with dimension size: depth 79 x height 17 mm x 15.5 mm for S-5085AS.
- Deadbolts: double throw 2 x 10 mm with anti-saw deadbolts protection.
- Forend: width 24 mm, thickness 3 mm, optional 24 mm. Standard square edges, optional round.
- Latchbolt: convex shape, withdrawn by key.
- Lever follower: 8 mm square, anti-rattle function.
- Centre to centre: 85 mm.
- Standard backset: 50 mm, 60 &70, optional 45mm.
- Function: latchbolt operated by key, lever handle or turn knob from either side. Deadbolts operated by key from either side using a double cylinder or single cylinder with turn.
- Handing: reversible (right or left).
- Supplied with: 1 pc mortise security lock, 1 pc flanged striking plate, 2 pcs pockets, 5 pcs countersunk flat head wood screws (2 pcs x dia. 4.8 x 25 mm + 3 pcs x dia. 3.5 x 16 mm) and 5 pcs countersunk flat head machine screws (2 pcs x M5 x 12 mm + 3 pcs x M4 x 12 mm).
- Meets dimensional recommendations of BS8300 and ADM (Approved Document M) for locks.
- Standard finish: Satin Stainless Steel (SSS).
- Other finishes are available upon request.

MORTISE LOCKS

Mortise security sashlock S-5085AS	Mortise security sashlock S-5085AS dimensions
	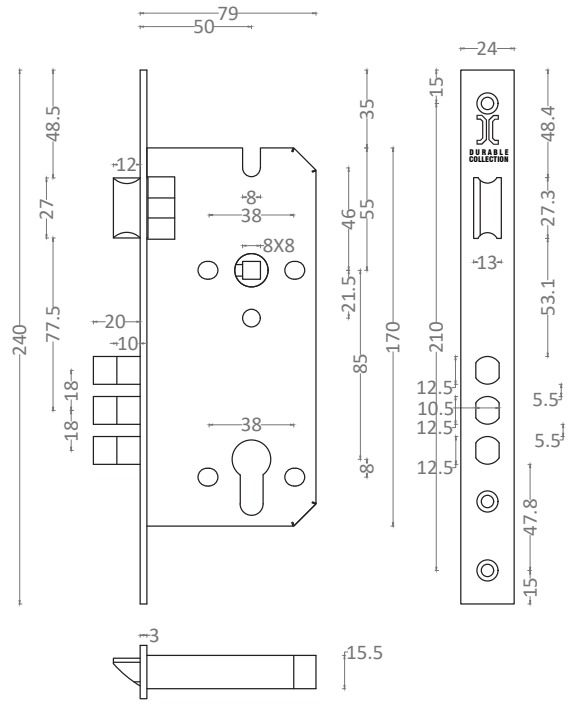

Striking plate and pocket dimensions for mortise security sashlock S-5085AS

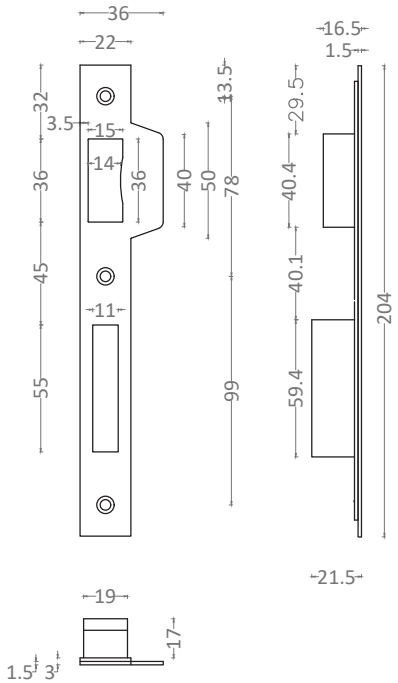

ITEM CODE: S-8072 XRAY

MORTISE XRAY LOCK

Features:

- Area of application: for single rebated flush wooden or metal doors.
- Material: forend, latchbolt and deadbolt in stainless steel EN 1.4301 (type SUS304), optional in EN 1.4401 (type SUS316).
- Lockcase or closure: pierced to accept 2 x Europrofile cylinder and 38 mm bolt through centres for fixing lever and cylinders roses. Bolt holes in vertical alignment for fixing backplate furniture. 1.5 mm thickness of cold-rolled hot dipped galvanized sheet with dimension size: depth 109 x height 165 mm x 13.5 mm for S-8072 XRAY.
- Deadbolt: double throw 2 x 10 mm.
- Forend: width 20 mm, thickness 3 mm, optional 24 mm. Standard square edges, optional round.
- Latchbolt: convex shape.
- Lever follower: 8 mm square.
- Centre to centre: 72 mm.
- Backset: (40-80) mm.
- Function: latchbolt operated by ½ lever handle or ½ turntable knob from either side. Deadbolt operated by key from either side using Europrofile single cylinder (it is recommended that only single cylinders to be used for X-ray rooms). Also full set of lever handle or turntable knob is not recommended, only drillings that do not penetrate the door leaf and are not positioned on one axis are required on each side of the door.
- Handing: non-reversible, (DIN right or DIN left should be specified while ordering).
- Supplied with: 1 pc mortise X-ray lock, 1 pc flanged striking plate with curved lipping, 2 pc pocket, 1 split spindle (8 mm square), 5 pcs countersunk flat head wood screws (2 pcs x dia. 4.7 x 25 mm + 3 pcs x dia. 3.5 x 16 mm) and 5 pcs countersunk flat head machine screws (2 pcs x M5 x 12 + 3 pcs x M4 x 12).
- Meets dimensional recommendations of BS8300 and ADM (Approved Document M) for locks.
- Standard finish: Satin Stainless Steel (SSS).
- Other finishes are available upon request.

MORTISE LOCKS

Mortise X-RAY lock S-8072 XRAY (photo below is showing left hand lock according to BS EN 12519:2004)	Mortise X-RAY lock S-8072 XRAY dimensions (drawing below is showing right hand lock according to BS EN 12519:2004)
	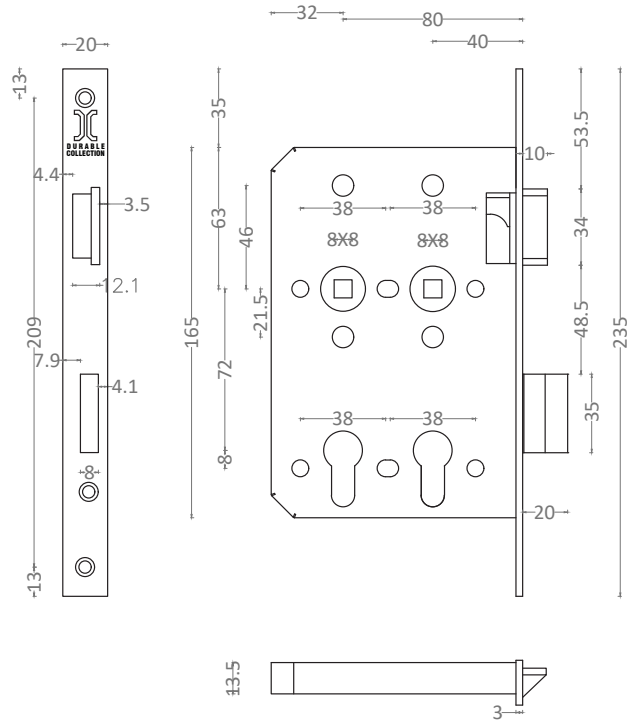

Striking plate and pocket dimensions for mortise X-RAY lock S-8072 XRAY

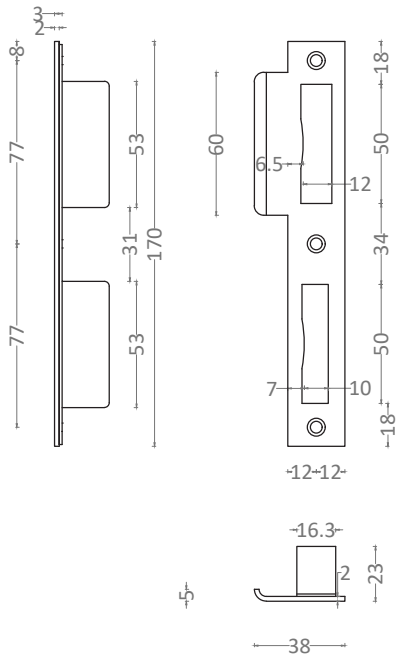

MORTISE LOCKS

ITEM CODE: SNS-3085
MORTISE SASHLOCK - NARROW STILE



Features:

- Area of application: For single rebated or flush wooden or metal doors
- Material: Forend, latchbolt and deadbolt: stainless steel EN 1.4301 (type SUS304), optional EN 1.4401 (type SUS306)
- Lockcase or closure: pierced to accept Europrofile cylinder and lever handle. Size 1.5 mm thickness of cold-rolled hot dipped galvanized sheet with dimension size: depth 42 x height 174 mm
- Forend: width 20 mm, thickness 3 mm, standard square edges, optional round
- Deadbolt: Single throw 16 mm.
- Latchbolt: convex shape, withdrawn by key
- Lever follower: 8 mm square with anti-rattle feature
- Centre to center: 85 mm. Backset: 30 mm
- Latchbolt operated by key, lever handle or turn knob from either side. Deadbolt operated by key from either side using a double cylinder or by key outside and thumb turn inside
- Handing: Reversible at site (right or left)
- Supplied with: 1 pc mortise lock, 1 pc flanged striking plate of 1.5 mm thickness, 5 pcs countersunk metal screws M4X12
- Standard finish: Satin stainless steel (SSS)
- Other finishes are available upon request

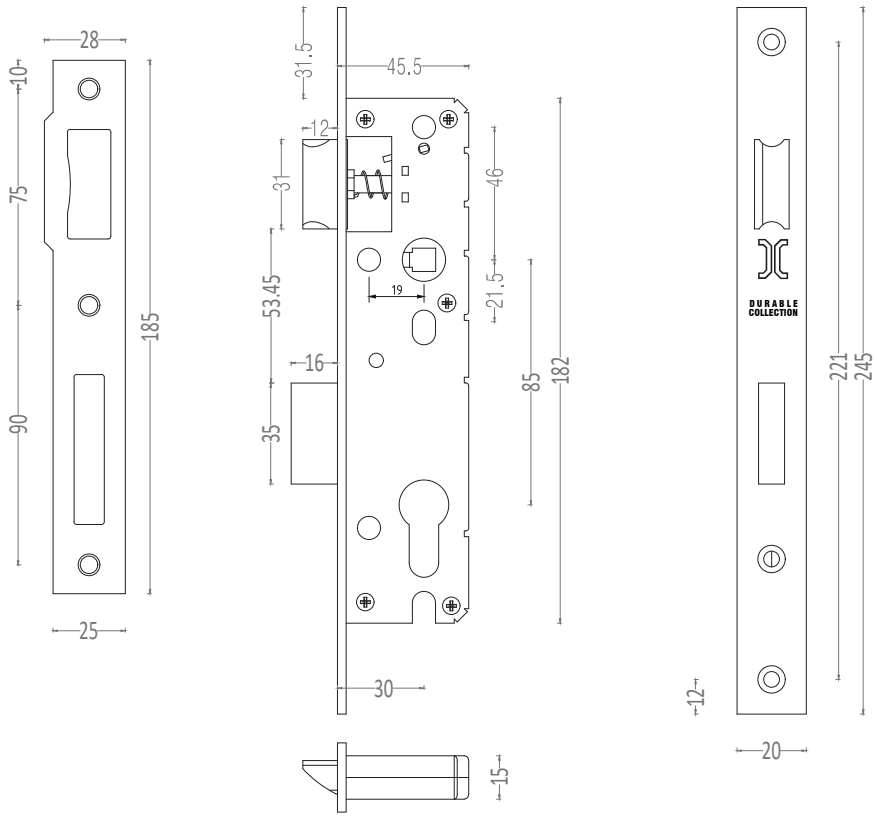

ITEM CODE: R-XX72 SERIES

MORTISE ROLLER LOCK

Features:

- Area of application: for flush wooden or metal doors.
- Material: forend, roller bolt and deadbolt in stainless steel EN 1.4301 (type SUS304), optional in EN 1.4401 (type SUS316).
- Lockcase or closure: pierced to accept Europrofile cylinder and 38 mm bolt through centres for fixing cylinder roses. Bolt holes in vertical alignment for fixing backplate furniture. 1.5 mm thickness of cold-rolled hot dipped galvanized sheet with dimension size: depth 84 x height 165 mm x 15 mm for R-5572.
- Deadbolt: double throw 2 x 10 mm, withdrawn by key.
- Forend: width 20 mm, thickness 3 mm, optional 24 mm. Standard square edges, optional round.
- Roller bolt: Adjustable.
- Striking plate: standard single action, for double action doors please specify.
- Centre to centre: standard 72 mm, optional 85 mm.
- Standard backset: 55 mm, optional 40, 45, 50, 60, 65, 70 mm
- Function: roller bolt operated by key from either side using a double cylinder or by key outside and thumb turn inside using single cylinder and turn.
- Supplied with: 1 pc mortise roller lock, 1 pc flanged striking plate, 2 pcs pockets, 5 pcs countersunk flat head wood screws (2 pcs x dia. 4.8 x 25 mm + 3 pcs x dia. 3.5 x 16 mm) and 5 pcs countersunk flat head machine screws (2 pcs x M5 x 12 mm + 3 pcs x M4 x 12 mm).
- Meets dimensional recommendations of BS8300 and ADM (Approved Document M) for locks.
- Standard finish: Satin Stainless Steel (SSS).
- Other finishes are available upon request.

MORTISE LOCKS

Mortise roller lock R-5572



Mortise roller lock R-5572 dimensions

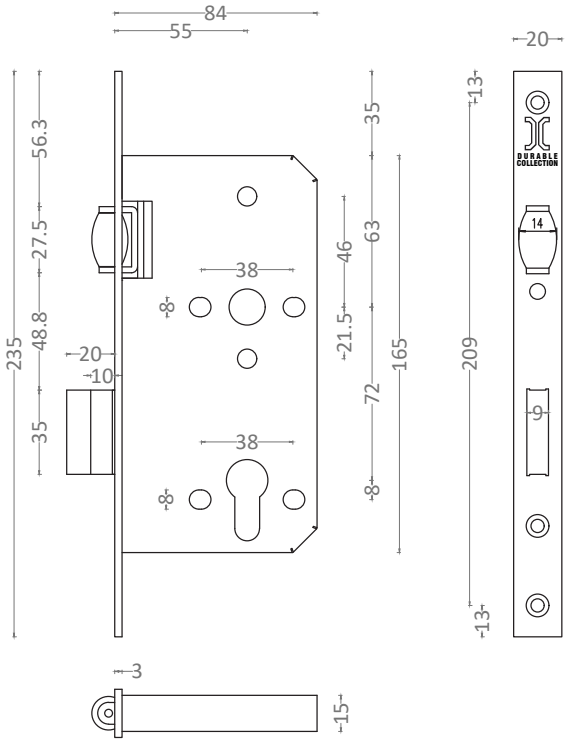

Striking plate and pocket dimensions for mortise roller lock R-5572

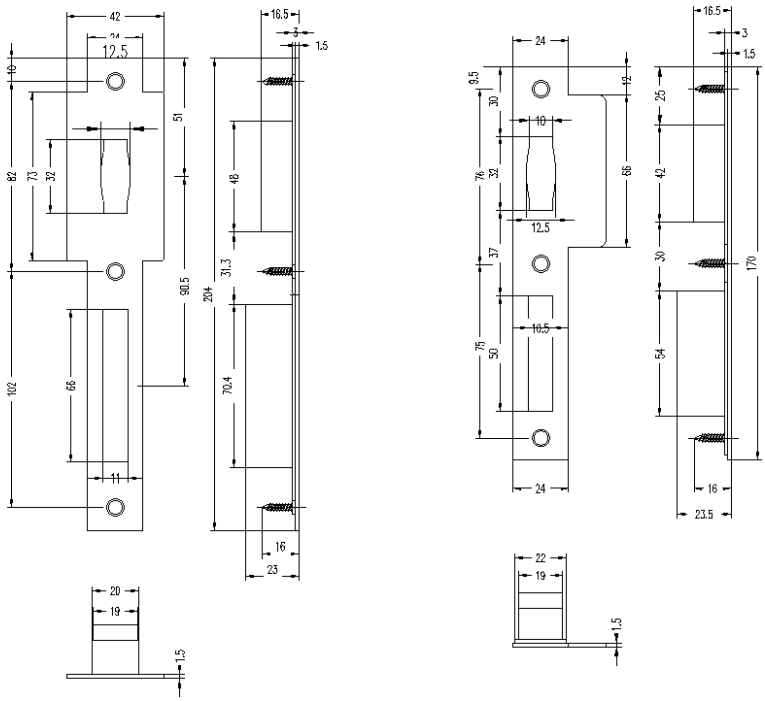

MORTISE LOCKS

ITEM CODE: R-55XX
MORTISE ROLLER LOCK

Features:

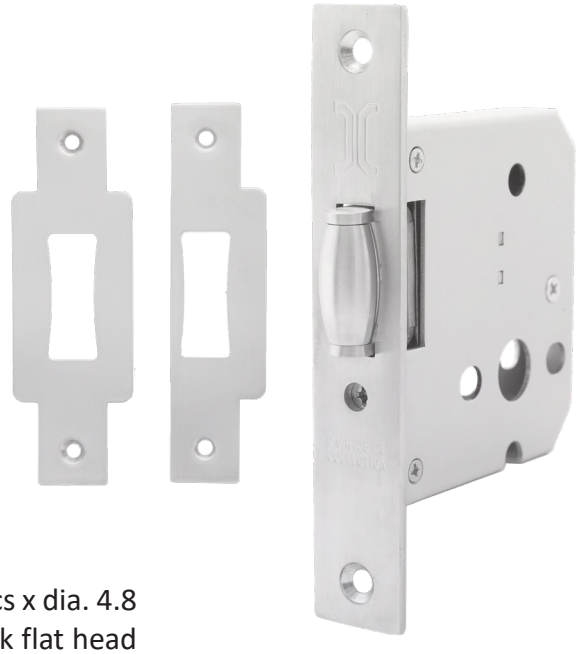

- Area of application: for flush wooden or metal doors.
- Material: forend and roller bolt in stainless steel EN 1.4301
  (type SUS304), optional in EN 1.4401 (type SUS316).
- Lockcase or closure: pierced to accept 38 mm bolt through fixing. 1.5 mm thickness of cold-rolled hot dipped galvanized sheet with dimension size: depth 85 x height 86 mm x 15 mm.
- Forend: Standard width 20 mm, thickness 3 mm, optional 24 mm. Standard square edges, optional round.
- Striking plate: standard single action, for double action doors please specify.
- Standard backset: 55 mm.
- Supplied with: 1 pc mortise roller lock, 1 pc striking plate, 1 pc pocket, 4 pcs countersunk flat head wood screws (2 pcs x dia. 4.8 x 25 mm + 2 pcs x dia. 3.5 x 16 mm) and 4 pcs countersunk flat head machine screws (2 pcs x M5 x 12 mm + 2 pcs x M4 x 12 mm).
- Standard finish: Satin Stainless Steel (SSS). Other finishes are available upon request.

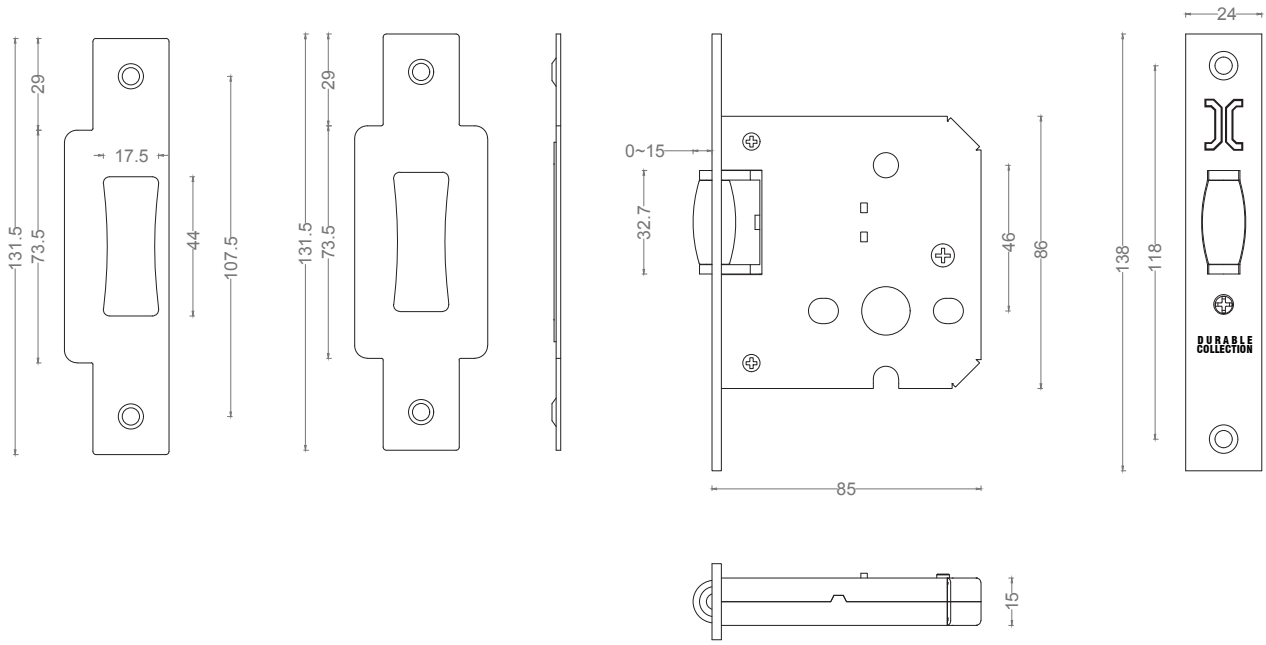

MORTISE LOCKS

ITEM CODE: R-30XX SERIES
MORTISE NARROW STILE ROLLER LOCK



Features:

- Area of application: for single rebated or flush wooden and metal doors.
- Material: forend and strike plate are in stainless steel EN 1.4301 (type SUS304). Roller and deabolt are made in zinc.
- Lockcase or closure: pierced to accept Europrofile cylinder. Depth 45.5 x height 199 x thickness 18 mm.
- Standard square edges.
- Supplied with single and double action strike plate. For single action door, you need to specify the door handing (DIN LEFT or DIN RIGHT), for double action door any version is suitable.
- Deadbolt: withdrawn by key.
- Standard backset: 30 mm.
- Function: Deadbolt operated by Europrofile cylinder from either side.
- Handing: Universal.
- Supplied with: 1 pc mortise lock, 2 pc flanged striking plate, 2 pc pocket, 5 pcs countersunk flat head wood screws and 5 pcs countersunk flat head machine screws.
- Standard finish: Satin Stainless Steel (SSS). Other finishes are available upon request.

MORTISE LOCKS

R-30XX DIN LEFT



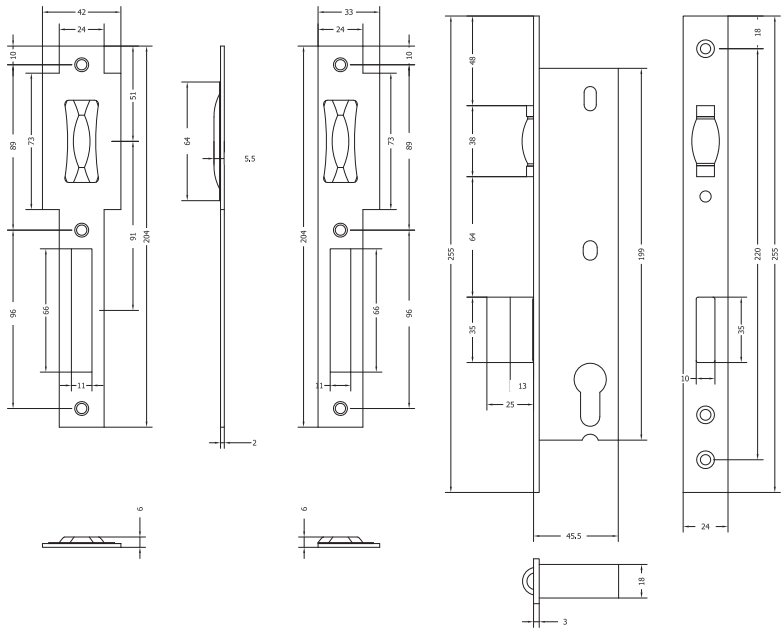

R-30XX DIN RIGHT



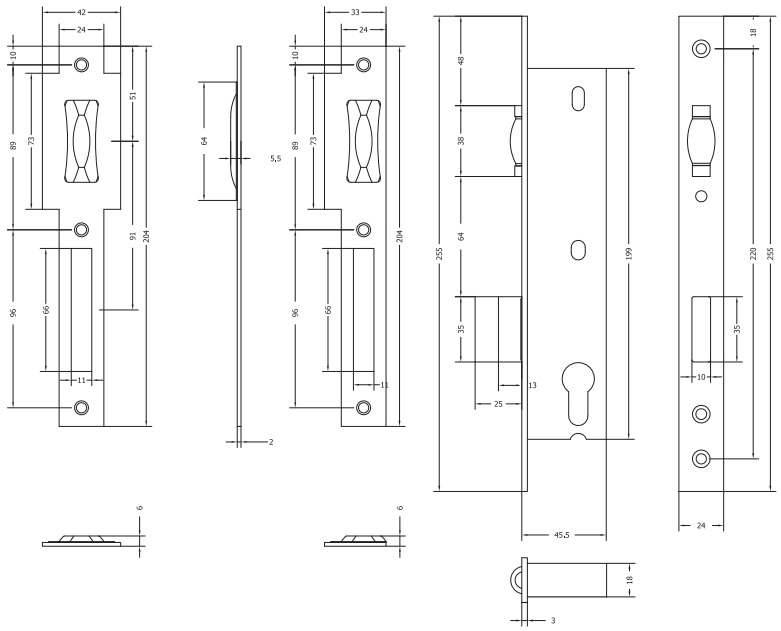

ITEM CODE: H-55XX

MORTISE SINGLE HOOK LOCK

Features:

- Area of application: for wooden and metal sliding doors.
- Forend: in stainless steel EN 1.4301 (type SUS304), optional in EN 1.4401 (type SUS316).
- Hook bolt: in stainless steel EN 1.4301.
- Lockcase or closure: pierced to accept Europrofile cylinder and 38mm bolt through centres for fixing cylinder roses, 1.5 mm thickness of cold-rolled hot dipped galvanized sheet with dimension size: depth 86.5 x height 92 mm x 13.5 mm for H-55XX.
- Hook bolt projection: 18 mm
- Forend: width 20 mm, thickness 3 mm, standard square edges, optional round.
- Standard backset: 55 mm, optional 50 mm.
- Function: hook bolt operated by double cylinder or by key using single cylinder and turn.
- Supplied with: 1 pc mortise hook lock, 1 pc striking plate, 1 pc pocket, 4 pcs countersunk flat head wood screws (4 pcs Ø3.8X25 mm) and 4 pcs countersunk flat head machine screws (2 pcs M5X12 + 2 pcs M4X12).
- Standard finish: Satin Stainless Steel (SSS).
- Other finishes are available upon request.

MORTISE LOCKS

Mortise hook lock H-55XX	Mortise hook lock H-55XX dimensions
	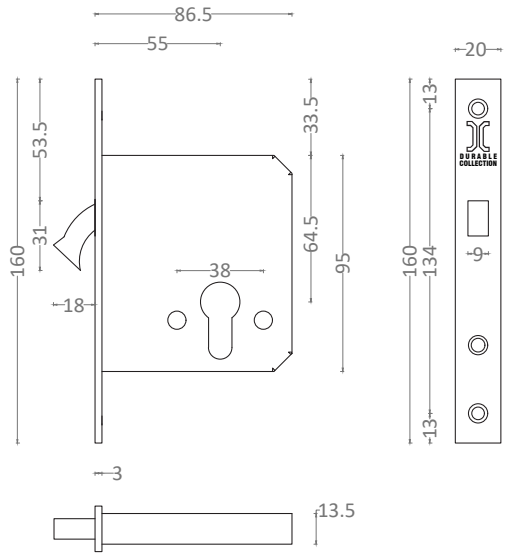

Striking plate and pocket dimensions for mortise hook lock H-55XX

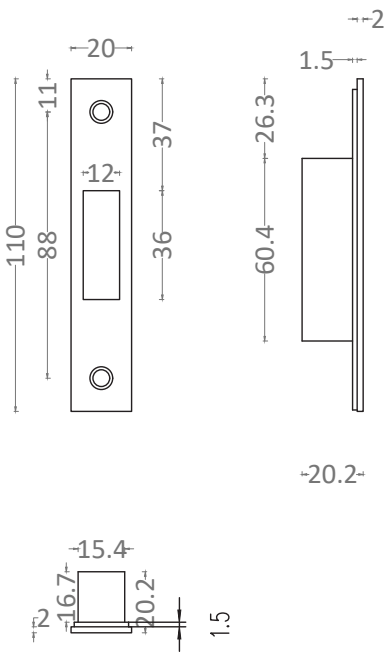

MORTISE LOCKS

ITEM CODE: H-45XX & H-50XX

Features:

- Area of application: for wooden and metal sliding doors.
- Forend: Stainless steel EN 1.4301 (type SUS304), optional in EN 1.4401 (type SUS316).
- Hook bolt: Zinc Alloy
- Lockcase or closure: pierced to accept turn and emergency release, case dimension size: depth 65 x height 82 x width 10 mm for H-45XX.
- Hook bolt projection: 15 mm
- Forend: width 13 mm, length 130 mm, thickness 3 mm, standard square edges, optional round.
- Standard backset: 45 mm, optional 50 mm.
- Function: hook bolt operated by turn and release (round turn dia. 63 mm, square turn 70 mm).
- Supplied with: 1 pc mortise hook lock, 1 pc striking plate, 1 pc pocket, 6 pcs countersunk flat head wood screws (4 pcs Ø3.8X25 mm).
- Standard finish: Satin Stainless Steel (SSS).
- Other finishes are available upon request.

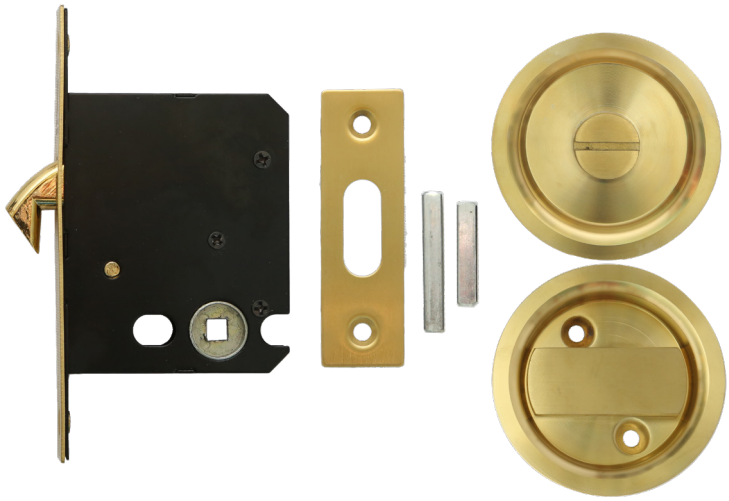



MORTISE LOCKS

ITEM CODE: H-50XX R SERIES



Features:

- Area of application: for wooden and metal sliding doors.
- Forend: Stainless steel EN 1.4301 (type SUS304), optional in EN 1.4401 (type SUS316).
- Hook bolt: Stainless steel
- Lockcase or closure: pierced to accept turn and emergency release, case dimension size: depth 67.5 x height 104 x width 13.5 mm.
- Hook bolt projection: 21.65 mm
- Forend: width 16.5 mm, length 158 mm, thickness 2.5 mm, standard round edges.
- Standard backset: 50.
- Function: hook bolt operated by rectangular or round turn and emergency release (round turn dia. 57 mm, rectangular shape 130mm x 36 mm).
- Standard finish: Satin Stainless Steel (SSS).

MORTISE LOCKS

H-50XX RFP RD



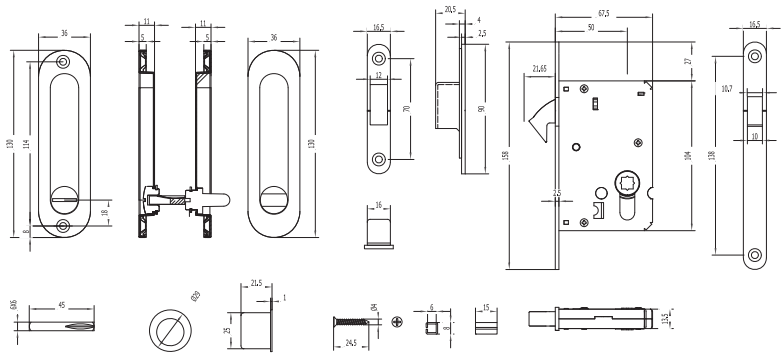

H-50XX RD



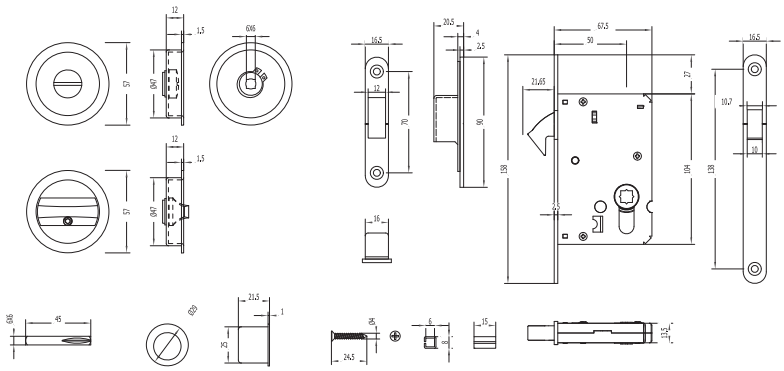

MORTISE LOCKS

ITEM CODE: L-6033
MORTISE BI-FUNCTION LATCHLOCK



Features:

- Area of application: for single rebated or flush wooden and metal doors.
- Material: forend, strike plate and latchbolt in stainless steel EN 1.4301 (type SUS304).
- Lockcase or closure: pierced to accept Europrofile cylinder. Depth 79 x height 72 mm x 16 mm.
- Removable forend: Standard width 25.5 mm, thickness 2mm + 1.5mm. Standard square edges.
- Lock is suitable for access panel or bi-function door (push/pull or passage door), best use with removable handle and cylinder pull (ES001).
- Latchbolt: convex shape, withdrawn by key or by removable handle. Removable lever follower is 8x8 mm.
- Standard backset: 60 mm.
- Function: latchbolt operated by removable handle or Europrofile cylinder from either side. Latchbolt can be retracted temporarily by using anti-thrust below latchbolt for passage function.
- Handing: reversible at site (right or left).
- Supplied with: 1 pc mortise lock, 1 pc flanged striking plate with curved lipping, 1 pc pocket, 4 pcs countersunk flat head wood screws and 4 pcs countersunk flat head machine screws and 1 screw for fixing Europrofile cylinder.
- Standard finish: Satin Stainless Steel (SSS). Other finishes are available upon request.

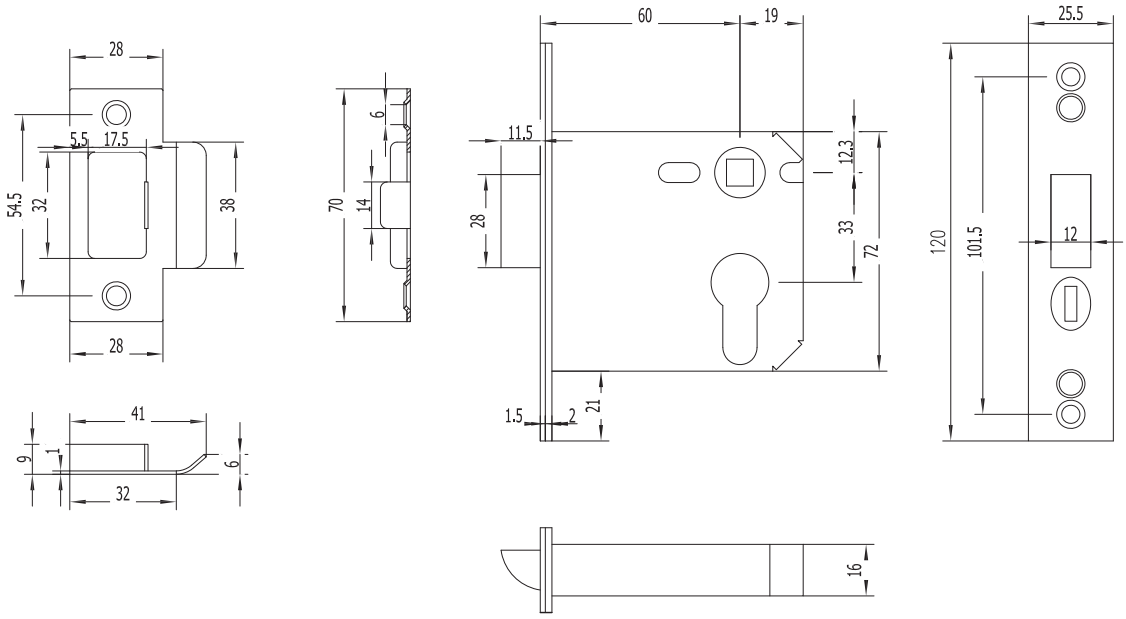

MORTISE LOCKS

ITEM CODE: S-6572 DINL/DINR
MORTISE SASHLOCK WITH SECURITY BOLTS

Features:

- Area of application: for single rebated or flush wooden and metal doors.
- Material: forend, latchbolt and security bolts in iron (galvanized finish), strike plate in stainless steel.
- Lockcase or closure: pierced to accept Europrofile cylinder. Bolt holes in vertical alignment for fixing lever handle.
- Dimension size: depth 85 x height 185 mm.
- Forend: width 24 mm, thickness 2.5 mm. Standard round edges.
- Latchbolt: withdrawn by key.
- Lever follower: 9x9 mm square. Model # adaptor 8 to 9 mm is required for 8x8 mm spindle. To be sold separately.
- Universal strike plate with model # s-strike-s-6572. To be sold separately.
- Available centre to centre: 72 mm.
- Standard backset: 65 mm.
- Function: Latchbolt is operated by key. Security bolts are operated by cylinder.
- Handing: reversible (right or left).
- Standard finish: Galvanized finish for forend and satin stainless steel (SSS) for strike plate.



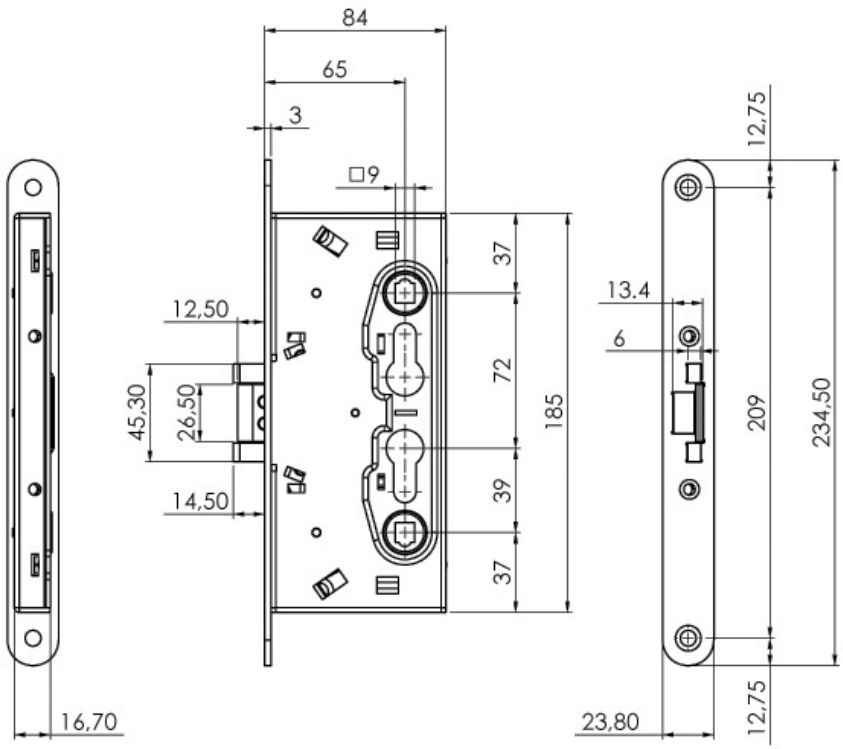

MORTISE LOCKS

ITEM CODE: D2000I & D1542
MULTIPOINT WITH CONCEALED RODS & SECURITY ESCUTCHEON

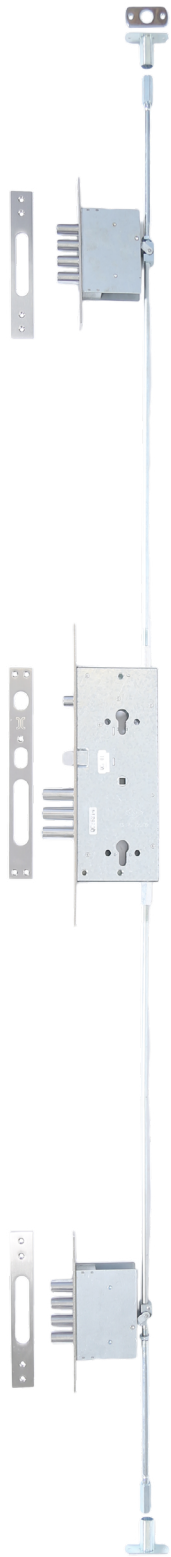

Features:

- Area of application: for metal doors.
- 15 points locking, Double cylinder locking.
- Height 2120 mm, backset: 65mm. Centre to centre: 85mm. follower: 8x8mm
- Supplied with fixing screws.
- Optional D1542: security escutcheon with hardened steel anti-drill rotating disk, concealed fixing, anti-pull protection, anti-twist protection, fits Europrofile cylinder and standard finish: satin nickel.
- Standard finish: Satin Nickel. Other finishes are available upon request.

DURABLE COLLECTION

MORTISE LOCKS

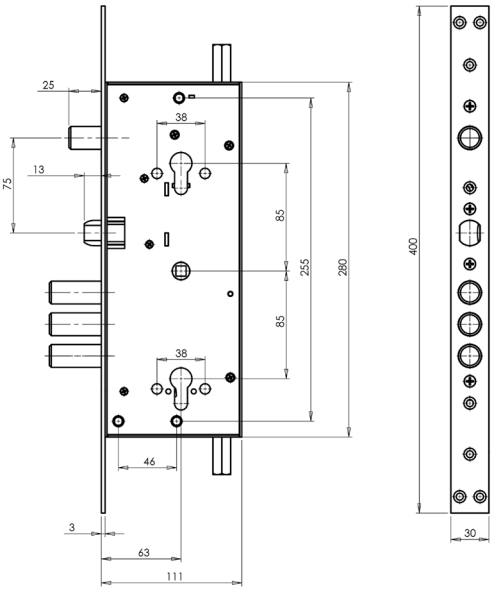

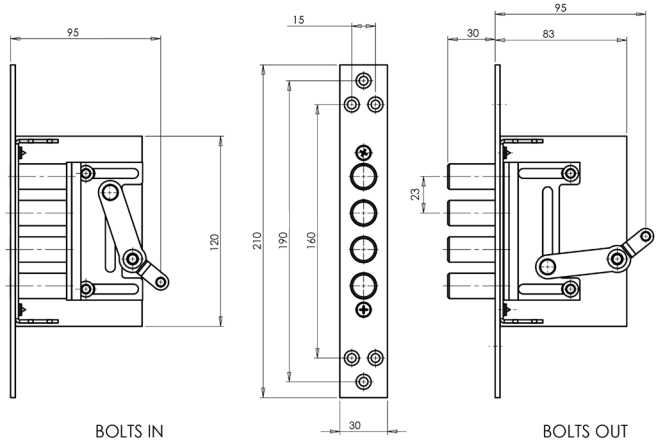









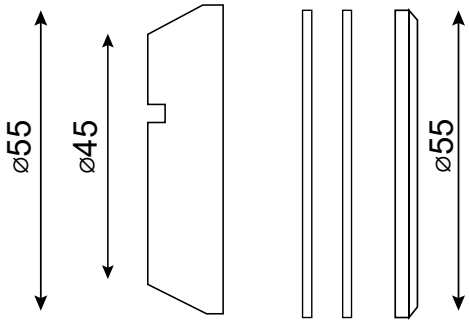

ITEM CODE: D2000C & D1542I
MULTIPOINT LOCK & SECURITY ESCUTCHEON



Features:

- Area of application: for wood and metal doors.
- 3 points locking: centre lock + 2 auxiliary locks
- Front faceplate (20x10.5mm) and strike plates (3 pieces) in Aluminium.
- Latchbolt: Zinc alloy. Latchbolt: Iron. Reversible latchbolt.
- Backset: 50mm. Centre to centre: 85mm. follower: 8x8mm
- Supplied with fixing screws.
- Optional D1542I: security escutcheon with hardened steel anti-drill rotating disk, concealed fixing, anti-pull protection, anti-twist protection, fits Europrofile cylinder and standard finish: Satin Nickel.
- Standard finish: Aluminium. Other finishes are available upon request.

MORTISE LOCKS



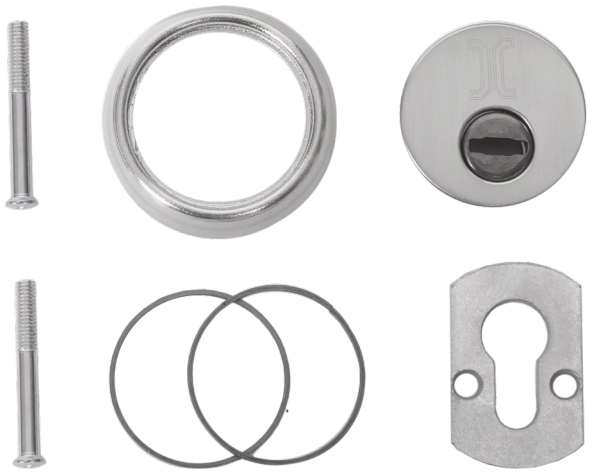

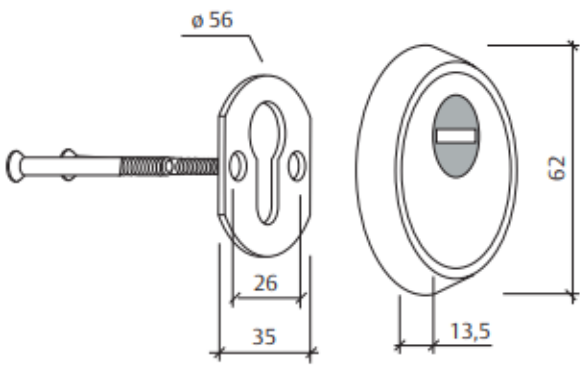

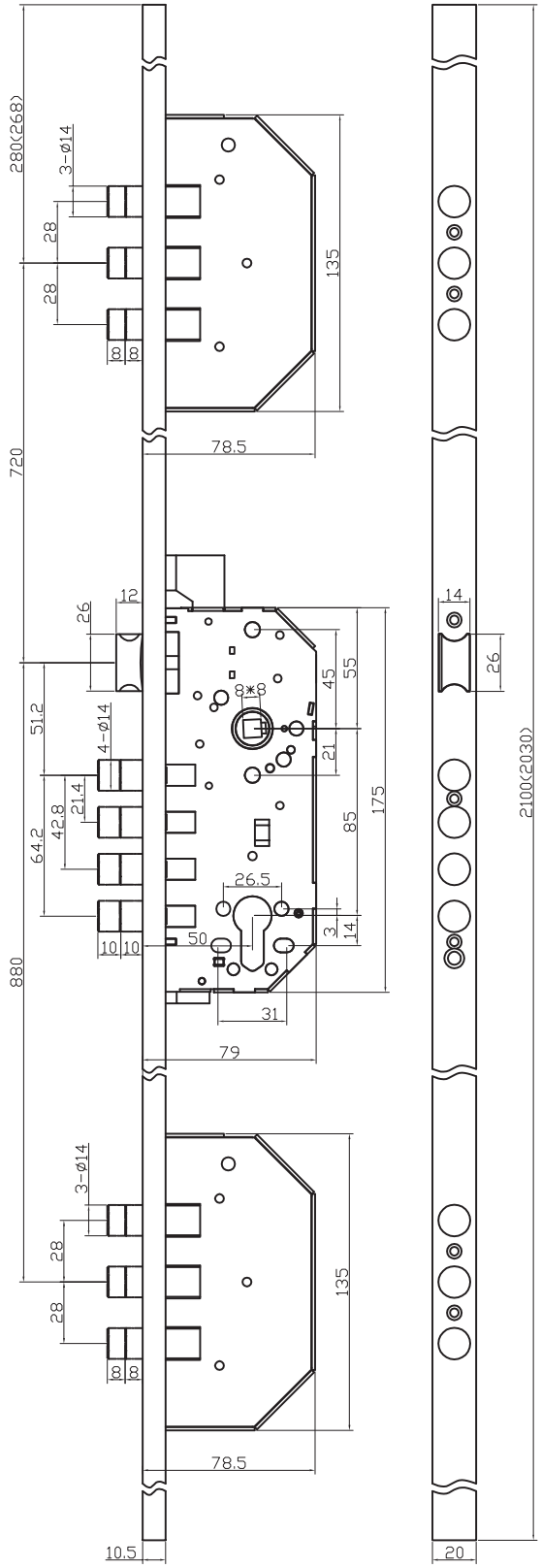

ITEM CODE: EML-FSX SERIES
ELECTRIFIED SOLENOID MORTISE LOCK

CE EN 179 EN 1634-1 EN 14846



Features:

- Area of application: for single rebated or flush wooden and metal doors.
- Material: forend, latchbolt and deadbolt in stainless steel EN 1.4301 (type SUS304).
- Lockcase or closure: pierced to accept Europrofile cylinder and 38 mm bolt through centres for fixing lever and cylinders roses.
- Deadbolt: single throw 1 x 21 mm.
- Forend: Standard width 24 mm, thickness 3 mm. Standard round edges, optional square.
- Latchbolt: 2 parts, withdrawn by key.
- Lever follower: 8 mm square, split.
- Centre to centre: 72 mm, standard backset: 60 mm.
- Mechanical override cylinder.
- Operating voltage 12VDC (+ or – 10%), max. current 500mA with Connecting cable.
- Panic/egress function via relocating screws on lever follower.
- Only works with recommended power supply. Consult Durable Collection before specifying.
- Optional features:
  - ◊ DBS- Dead Bolt Switch, monitor the use of the deadbolt.
  - ◊ DPS- Auxiliary Bolt Switch, monitor the position of the door (door open/door close) via auxiliary bolt.
  - ◊ REX- Request to Exit, switch the signal use of lever from secured side.
  - ◊ MCS- Mortise Cylinder Switch, monitor the use of the cylinder.
  - ◊ Designed for doors thickness 44 mm standard.
  - ◊ Function: Outside lever locked (EML-FSE) or unlocked (EML-FSA) electronically via relocating screw at site.
  - ◊ Fail locked, outside handle is locked when power is removed.
  - ◊ Fail unlocked, outside handle is unlocked when power is removed.
- Inside lever is always free for immediate egress.
- When door is shut the latchbolt is locked against end pressure due to anti-thrust latch below latchbolt.
- Automatic deadlocking (every time the door is shut it is deadlocked).
- Supplied with: 1 pc electrified mortise lock, 1 pc striking plate with lipping, 5 pcs countersunk flat head wood screws (2 pcs x dia. 4.8 x 25 mm + 3 pcs x dia. 3.5 x 16 mm) and 5 pcs countersunk flat head machine screws (2 pcs x M5 x 12 mm + 3 pcs x M4 x 12 mm).
- Meets dimensional recommendations of BS8300 and ADM (Approved Document M) for locks.
- Certificate of Constancy of Performance # 2649-CPR-26002016 & # 2649-CPR-26002017
- Tested successfully to EN1634-1, 4 hours.
- Standard finish: Satin Stainless Steel (SSS).
- Other finishes are available upon request.

MORTISE LOCKS

Electrified solenoid mortise lock



Electrified mortise lock dimensions

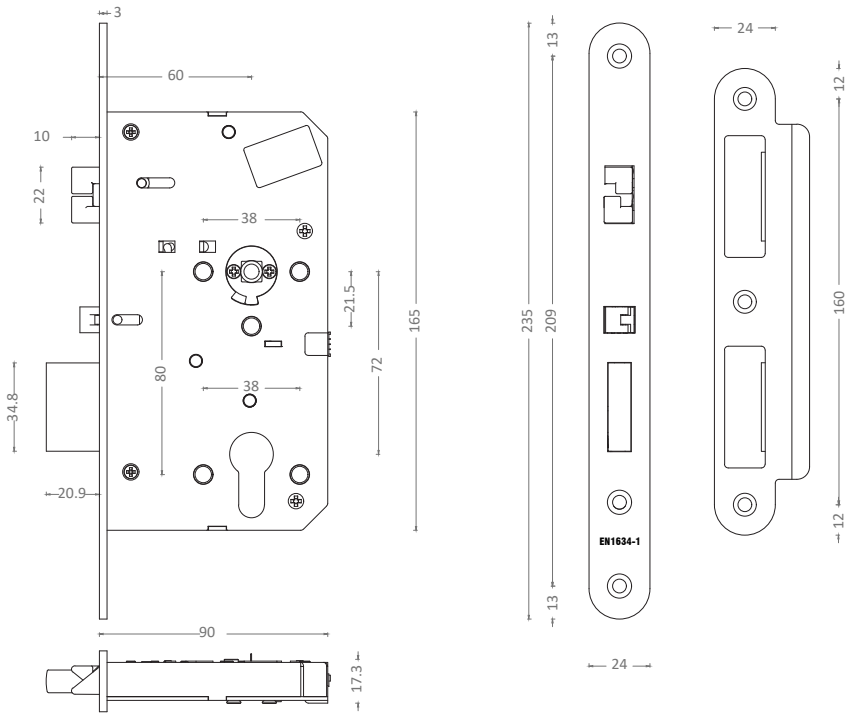

ITEM CODE: H-40XX

MORTISE DOUBLE HOOK LOCK

Features:

- Area of application: for wooden and metal sliding doors.
- Forend: in stainless steel EN 1.4301 (type SUS304), optional in EN 1.4401 (type SUS316).
- Hook bolt: in stainless steel EN 1.4301.
- Lockcase or closure: pierced to accept Europrofile cylinder, 1.5 mm thickness of cold-rolled hot dipped galvanized sheet with dimension size: depth 69 x height 95 mm x 15 mm.
- Hook bolt projection: 20 mm
- Forend: width 20 mm, thickness 3 mm, standard square edges, optional round.
- Standard backset: 40 mm.
- Function: double hook bolts operated by double cylinder or by key using single cylinder and turn.
- Supplied with: 1 pc mortise hook lock, 1 pc striking plate, 1 pc pocket, 4 pcs countersunk flat head wood screws (4 pcs Ø3.8X25 mm) and 4 pcs countersunk flat head machine screws (2 pcs M5X12 + 2 pcs M4X12).
- Standard finish: Satin Stainless Steel (SSS).
- Other finishes are available upon request.

MORTISE LOCKS

Mortise double hook lock H-40XX	Mortise double hook lock H-40XX dimensions
	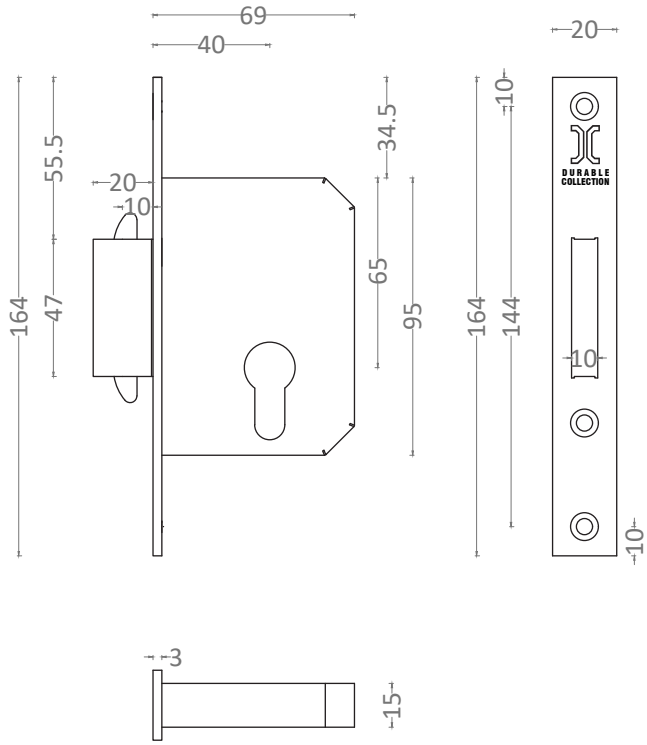

Striking plate and pocket dimensions for mortise double hook lock H-40XX

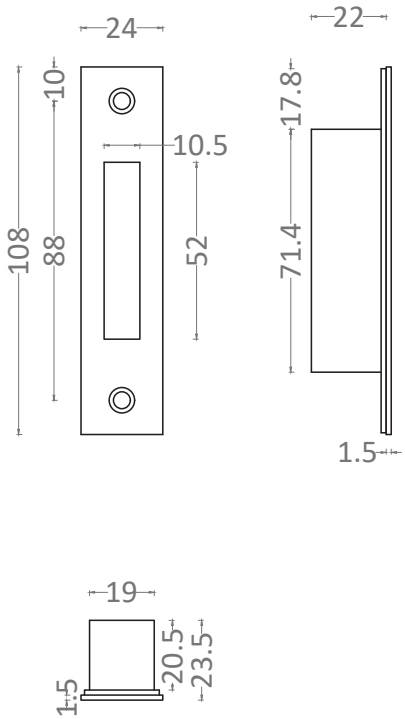

ITEM CODE: SE-XXXX

MORTISE SLIDING EDGE PULL HANDLE HOOK LOCK

Features:

- Area of application: for wooden and metal sliding doors.
- Forend: in stainless steel EN 1.4301 (type SUS304), optional in EN 1.4401 (type SUS316).
- Hook bolt: in stainless steel EN 1.4301.
- Lockcase or closure: 1.5 mm thickness of cold-rolled hot dipped galvanized sheet with dimension size: depth 86.5 x height 95 mm x 13.5 mm.
- Hook bolt projection: 24 mm
- Forend: width 20 mm, thickness 3 mm, standard square edges, optional round.
- Function: hook bolt operated by pressing button located on the forend.
- Supplied with: 1 pc mortise hook lock, 1 pc striking plate, 1 pc pocket, 4 pcs countersunk flat head wood screws (4 pcs Ø3.8X25 mm) and 4 pcs countersunk flat head machine screws (2 pcs M5X12 + 2 pcs M4X12).
- Standard finish: Satin Stainless Steel (SSS).
- Other finishes are available upon request.

Mortise hook lock SE-XXXX	Mortise hook lock SE-XXXX dimensions
	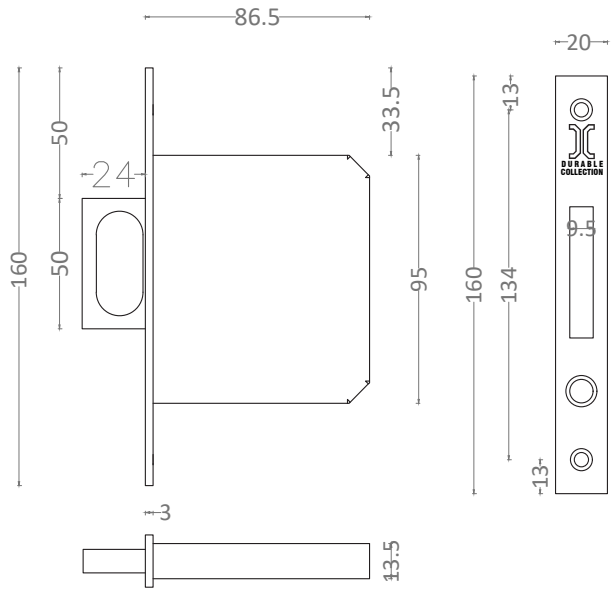

ITEM CODE: SEH-55XX

MORTISE SLIDING EDGE PULL HANDLE DOUBLE HOOK LOCK

Features:

- Area of application: for wooden and metal sliding doors.
- Forend: in stainless steel EN 1.4301 (type SUS304), optional in EN 1.4401 (type SUS316).
- Hook bolt: in stainless steel EN 1.4301.
- Lockcase or closure: pierced to accept Europrofile cylinder, 1.5 mm thickness of cold-rolled hot dipped galvanized sheet with dimension size: depth 84 x height 165 mm x 13 mm.
- Hook bolt projection: 24 mm + 18 mm
- Forend: width 20 mm, thickness 3 mm, standard square edges, optional round.
- Standard backset: 55 mm.
- Function: hook bolt operated by double cylinder or by key using single cylinder and turn, additional hook bolt operated by pressing button located on the forend.
- Supplied with: 1 pc mortise hook lock, 1 pc striking plate, 1 pc pocket, 4 pcs countersunk flat head wood screws (4 pcs Ø3.8X25 mm) and 4 pcs countersunk flat head machine screws (2 pcs M5X12 + 2 pcs M4X12).
- Standard finish: Satin Stainless Steel (SSS).
- Other finishes are available upon request.

MORTISE LOCKS

Mortise double hook lock SEH-55XX	Mortise double hook lock SEH-55XX dimensions
	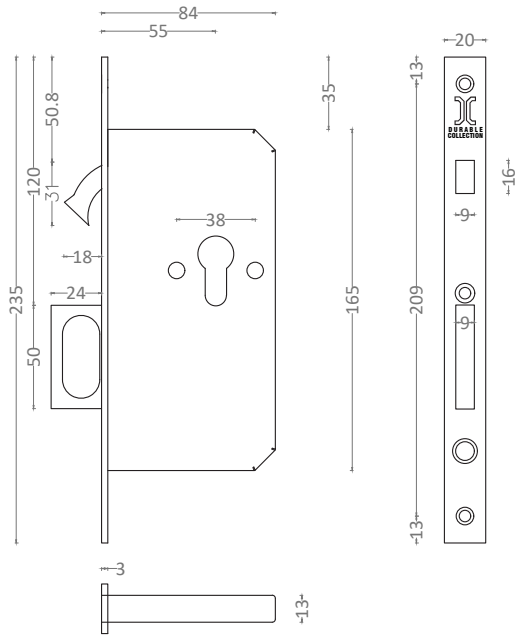

Striking plate and pocket dimensions for mortise double hook lock SEH-55XX

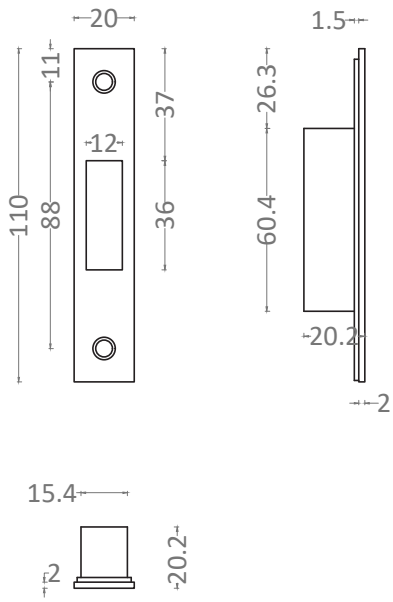

MORTISE LOCKS

ITEM CODE: RC002
ROLLER CATCH



Features:

- Area of application: for wood or steel doors.
- Standard: Stainless steel EN 1.4301 (type SUS304).
- Optional: Stainless steel EN 1.4401 (type SUS316).
- Roller catch prevents cabinet doors and drawers from opening on their own or not remaining shut.
- Universal handing.
- Standard forend size: 20x89mm, standard strike size 34.3x57mm
- Standard finish: Satin stainless steel. Other finishes are available upon request. PVD coating is optional.



