INSTALLATION INSTRUCTIONS

Art#: HG433SSXXX Series

Butt Hinges Series

DURABLE COLLECTION

Unit: mm

A) PACKAGE INCLUDES:

x2

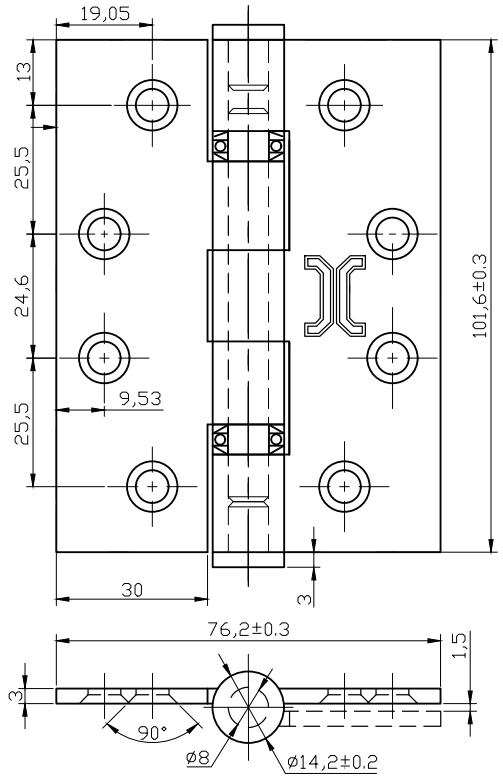

x16



or

x16



2 pcs SUS304 hinges (4”x3”x3.0mm)

16 pcs wood or metal screws

B) TOOLS NEEDED:

3 meters tape measure	Screw driver	Power drill	Marker	Carpenter square for making the hinge cut straight	Center punch	Wood stop wedge or similar device for holding leaf in position	Hammer	Chisel
								

Note: Before proceeding, please ensure that the hinge is the appropriate size.

INSTALLATION INSTRUCTIONS
Art#: HG433SSXXX Series
Butt Hinges Series

DURABLE COLLECTION

Unit: mm

C) HINGE INSTALLATION:

1- Identify the required fixing position of the hinges on the leaf and frame.

2- Position the hinge leaf so that the knuckle (crank line) is slightly proud of the door leaf and trace around the hinge leaf.

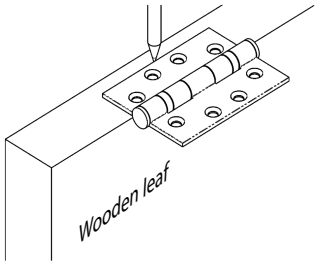

3- Mortise out the door leaf to match the thickness of the hinge leaf. This will ensures optimal clearance between leaf and frame, in compliance with BS 4787.

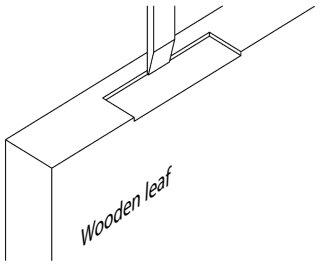

4- Place the hinge leaf in the mortise, mark the hole positions, and then pilot drill to accomodate the fixing screws. This step is particularly important when working with hardwood.

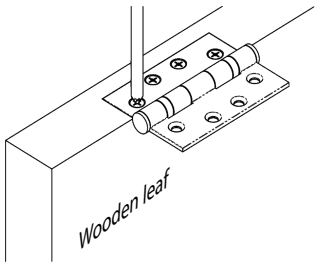

5- Secure the hinge to the leaf with the provided screws, and repeat the process for the remaining hinges.

6- Once all hinges are fitted to the door leaf, position the door leaf against the frame. Place packing under the bottom edge of the door leaf to ensure the required clearance between the door leaf and the floor. Then, mark the hinge positions on the frame.

7- With the leaf in the "open" position; open all hinge leaves flat against the door frame ensuring they align with the positions previously marked on the door frame. Once in position, mark out and mortise as per instructions 2-5.

Unit: mm

8- Final installation check: Ensure that all screws are fully tightened. If required, the hinges may be lubricated using fine machine oil such as "3 in 1" or similar ensuring that any floor finishes are protected, and any excess oil is wiped off on completion.

N.B.1: It is important that all of the hinge's pins are vertically aligned on any particular leaf. This is to ensure that the axis of rotation of the leaf lies on a common centreline, parallel to the edge of the leaf and frame. Misaligned hinges will distort the rotational axis, leading to undesirable stresses on the hinges, their fixing screws, the leaf, and its frame. Consequently, hinges and door performance will be impaired, and hinge's wear will be increased. If door's hinges regularly work themselves loose or they continually squeak, then hinge misalignment should be investigated. Routine door maintenance should include periodic lubrication of hinges with light machine oil, and a tightening of any loose screws.

N.B.2: For longer lifetime, we advise to lubricate the hinge every 25,000 Cycles.

D) SUGGESTED MAINTENANCE:

1- We suggest monthly maintenance: Check for signs of bearing wear, for example cracked ball bearing shrouds.
2- Check the operation of the door that it has not dropped at the latch end and is dragging as this is a clear indication that the hinge is not carrying the weight of the leaf.
3- Care of finishes:
- *Satin stainless steel & Polished stainless steel:*
  - Clean regularly with detergent and warm water.
  - Dry with soft cloth.
  - Do not use abrasive cleaning materials.
- *Powder coated:*
  - Epoxy, polyester or polyurethane power coated finishes should be cleaned with a soft cloth and household furniture polish.
  - Under no circumstances must industrial solvents be used.
  - Do not use abrasive cleaning materials such as Brillo pads or similar.

INSTALLATION INSTRUCTIONS

Art#: HG433SSXXX Series

Butt Hinges Series

DURABLE COLLECTION

Unit: mm

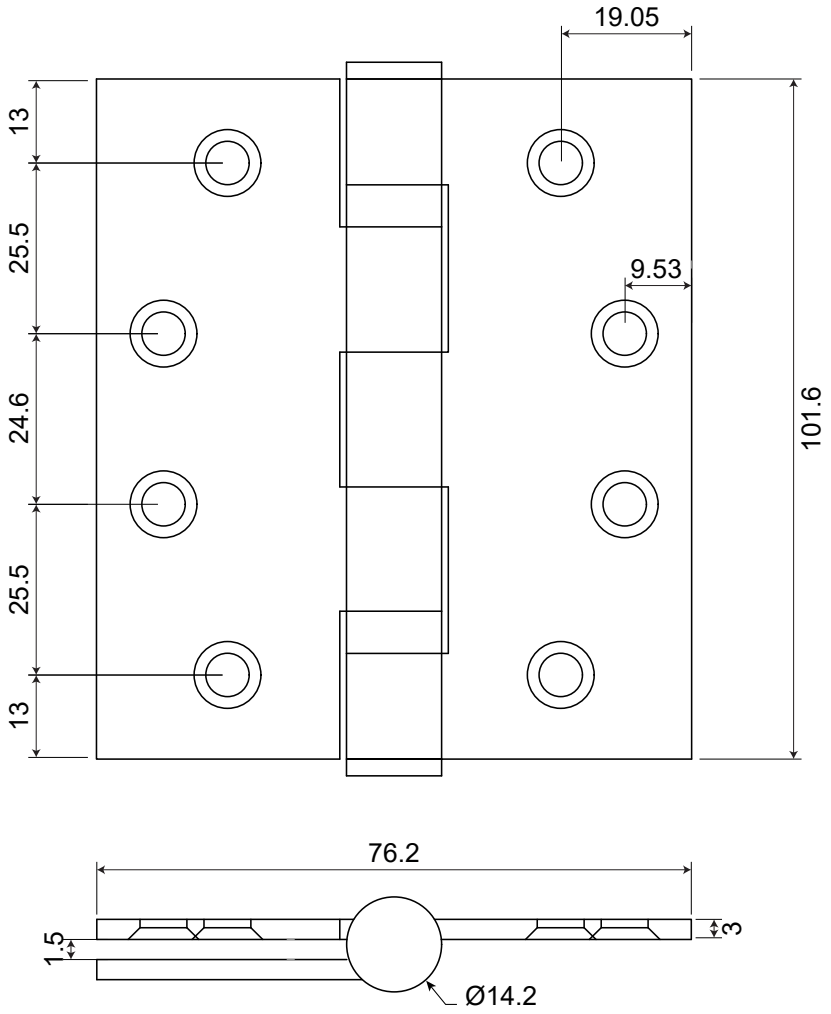

DURABLE COLLECTION LTD
Fergusson House, 124 City Rd,
London EC1V 2NX - England
Tel: +44 (0) 203 693 4452
www.durablecollection.co.uk

2019

2649-CPR-26001202 EN 1935:2002/AC:2003

Structure: N/A

4	7	6	1^3	1	4	0	13

Door in a closed position

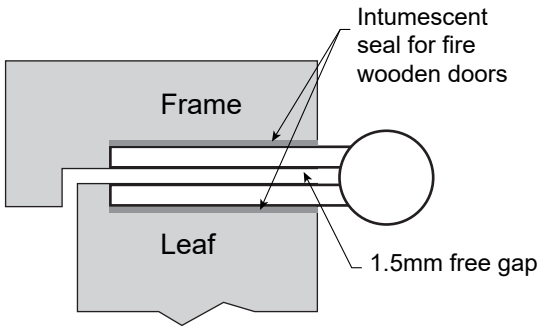

Door in a open position

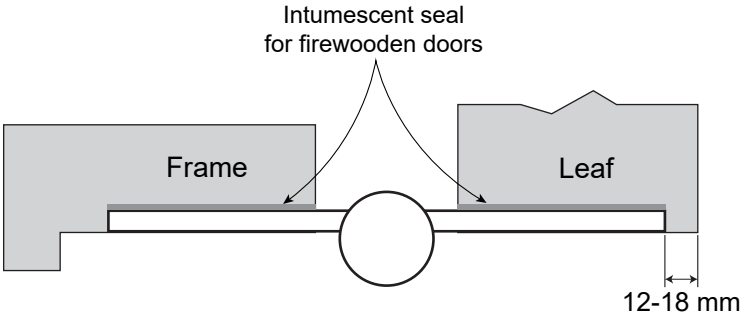

1- Minimum 12mm from hinge edge to leaf edge (Fire doors - 44mm leaf thickness).
2- Minimum 18mm from hinge edge to leaf edge (Fire doors - 54mm leaf thickness).
3- For fire resistant wooden doors intumescent seal are required.

INSTALLATION INSTRUCTIONS

Art#: HG433SSXXX Series

Butt Hinges Series

DURABLE COLLECTION

Unit: mm

Hinges location - 3 pcs

