DURABLE COLLECTION

ITEM CODE: HL2B05B & HL2KB05B SERIES
SOLID BRASS LEVER HANDLES

Features:



• Full solid brass lever handle set with return spring, mounted on a lever rose with matching cylinder rose. Both roses feature concealed fixing with an easy-click mounting system.
• Material: Solid brass.
• Door thickness: Up to 50 mm. For thicker doors, specify requirements when ordering.
• Options:

- HL2B05B-ANSI,designed to suit ANSI mortise lock 1000 series.
- HL2B05B-EN,designed to suit European mortise lock.
- HL2KB05B-ANSI (knurled design) designed to suit ANSI mortise lock 1000 series.
- HL2KB05B-EN (knurled design),designed to suit European mortise lock.

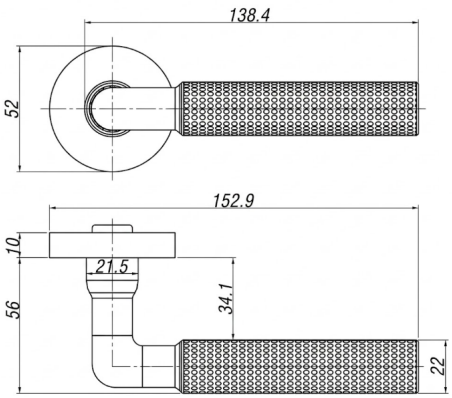

• Standard finish: Satin brass, Matt black, Gun metal. Additional finishes available upon request.



