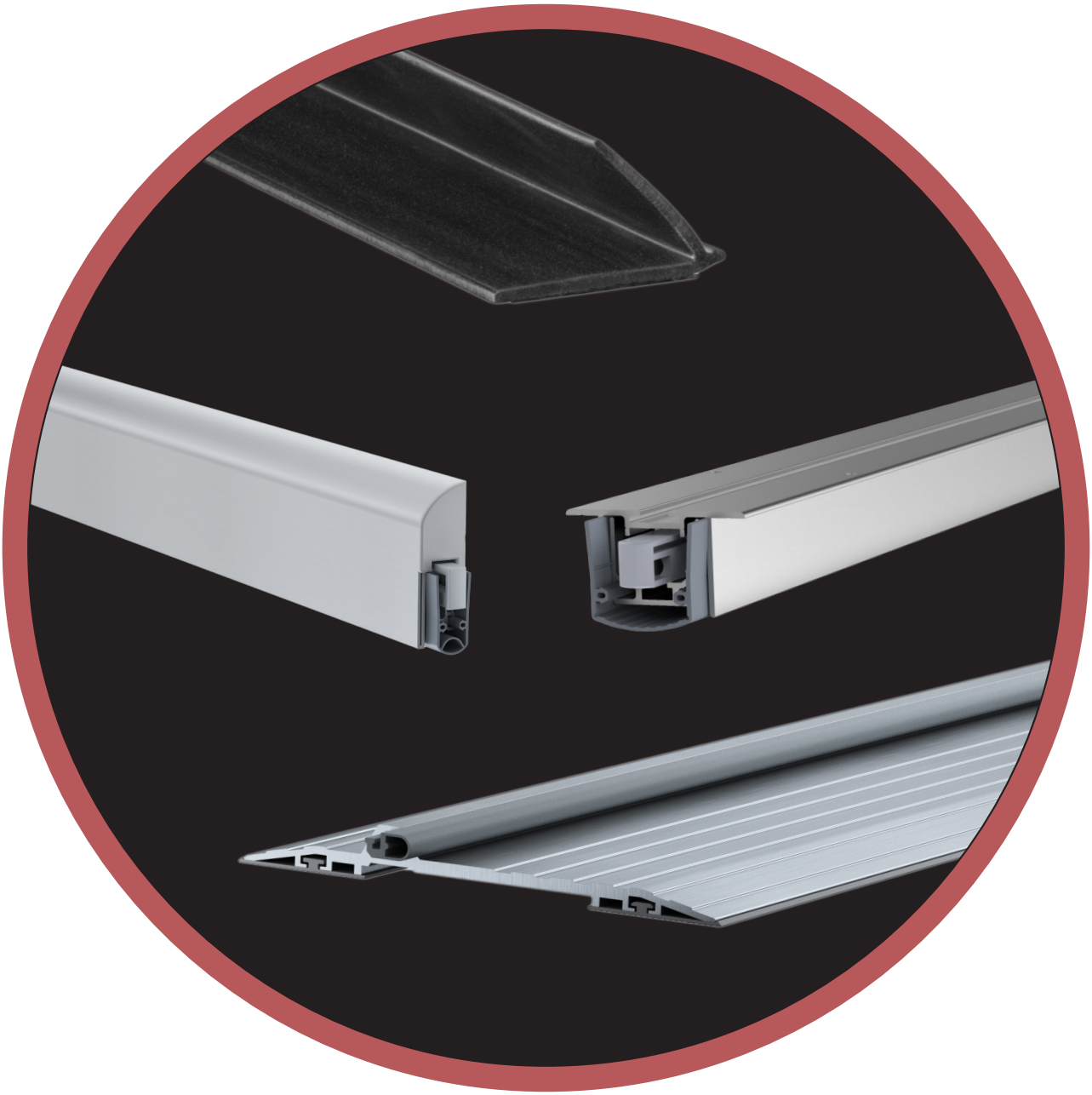

ITEM CODE: D286 SERIES
SURFACE MOUNTED SILICONE SELF-EXTINGUISHING GASKET & PVC COVER CAP

Features:

- Area of application: All types of doors.
- Base material: Aluminum.
- Surface mounted slim design concealed fixing silicone perimeter gasket & PVC cover cap.
- Retrofit.
- Elongated fixing holes for easy positioning and adjustment.
- Snap on cover. Supplied with fixing screws.
- Tested to STC51+.
- UL LISTED.
- Standard lengths: 1000 mm and 2250 mm. Optional additional lengths 1250, 2500 and 3000 mm.
- Standard finish: Silver anodised aluminium with grey silicone rubber gasket.

D286



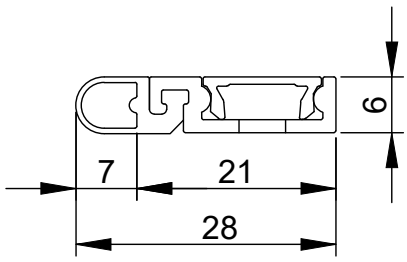

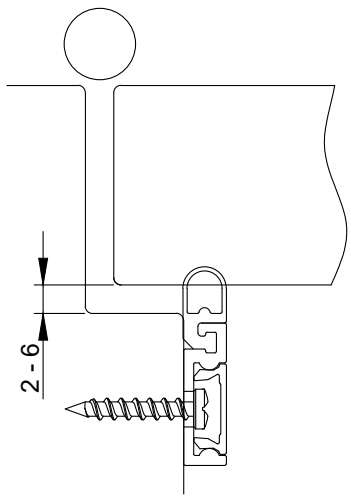

ITEM CODE: D4200A SERIES
THRESHOLD ALUMINIUM PLATE WITH SILICONE INSERT & PVC BEDDING GASKET.

Features:

- Area of application: Wooden or metal doors.
- Base material: Aluminum.
- Suitable for outward opening doors to prevent rain, draughts, light and noise penetration.
- The high performance silicone insert compression seal, combined with the PVC bedding gasket, help provide an effective acoustic barrier.
- Tested to STC51+.
- UL LISTED.
- Category H seals
- Supplied with fixing accessories.
- May be used with a panic type exit device.
- Meets Approved Document M (England and Wales).
- Standard lengths: 1000 mm and 2250 mm. Optional additional lengths 1250, 1500, 2500 and 3000 mm.
- Standard finish: Silver anodized aluminium with Grey silicone insert and gasket.

D4200A



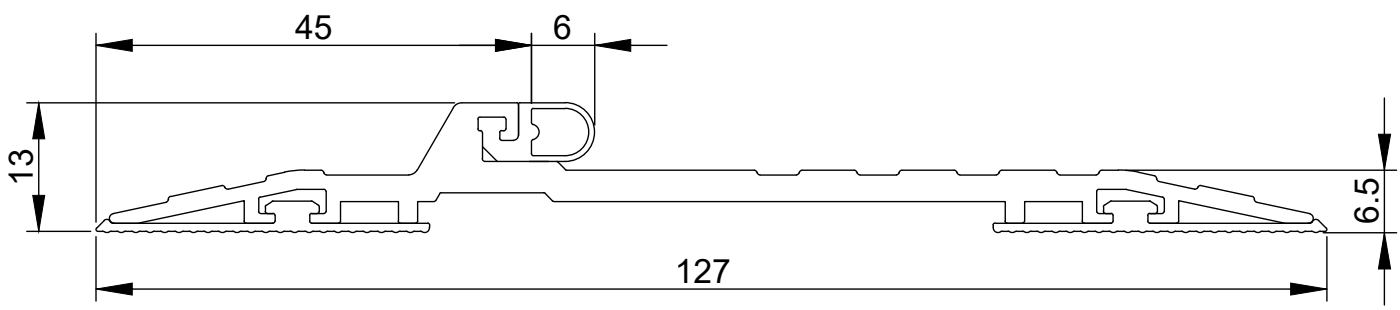

UL SEALS

ITEM CODE: D8010Y SERIES
DOOR AUTOMATIC CONCEALED BOTTOM NEOPRENE
SELF-EXTINGUISHING SEALS

Features:

- Area of application: Metal, wood or PVC doors.
- For commercial and residential buildings.
- A highly efficiency mechanism that lifts the seal clear of the floor as soon as the door by a few millimeters.
- Used to seal the gap at the bottom of your door to prevent infiltration of sound, lights, draught, insects, moisture and smoke.
- UL LISTED. Non handed.
- Retracts parallel when the door opens/closes to minimize friction with the floor. Self-levelling for uneven floors.
- Available standard lengths: 914, 1000 and 1220 mm.
- Aluminum profile/section. Seal material: Neoprene. Supplied with fixing screws.
- Available finish: Silver anodized aluminium.

D8010Y

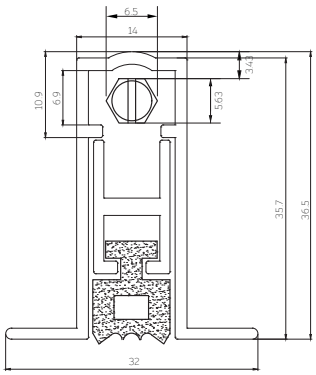

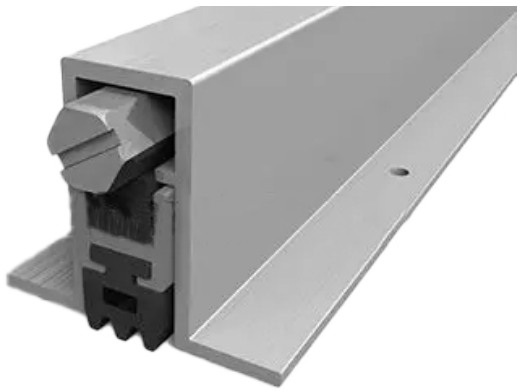

	CUT DOWN TO					
MODEL #	786mm	829mm	914mm	939mm	1000mm	1220mm
D8010Y - 914	⊢ — — —	— — —	— — — ⊣			
D8010Y - 1000		⊢ — — —	— — —	— — —	— — — ⊣	
D8010Y - 1220				⊢ — — —	— — —	— — — ⊣

UL SEALS

ITEM CODE: D8100A & D8100B SERIES
DOOR AUTOMATIC CONCEALED BOTTOM SILICONE SELF-EXTINGUISHING SEALS

SIZE	MAXIMUM CUT BACK
385mm	230mm
500mm	300mm
585mm	485mm
685mm	555mm
750mm	555mm
900mm	685mm
1050mm	855mm
1200mm	1045mm
1350mm	1100mm
1500mm	1320mm
1650mm	1420mm
1800mm	1555mm
1950mm	1715mm
2100mm	1820mm

Features:

- Area of application: Metal, wood or PVC doors.
- For commercial and residential buildings.
- A highly efficiency mechanism that lifts the seal clear of the floor as soon as the door by a few millimeters.
- UL Listed, Category H seals.
- Used to seal the gap at the bottom of your door to prevent infiltration of sound (tested to STC51+),lights, draught, insects, moisture and smoke.
- UL LISTED. Non handed. Tool free single sliding actuator can be deactivated before building occupancy.
- Retracts parallel when the door opens/closes to minimize friction with the floor. Self-leveling for uneven floors. Overload protection protects seal from excessive wear.
- Available lengths and cut back: Check table.
- Aluminum profile/section. Seal material: Silicone. Supplied with fixing screws. Available finish: Silver anodized aluminum.

ITEM CODE	SIZE	
D8100A	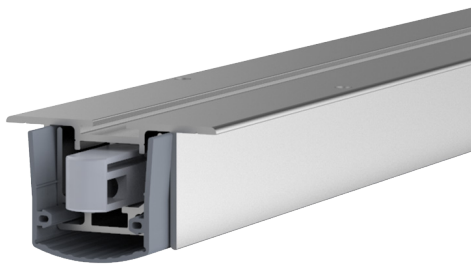	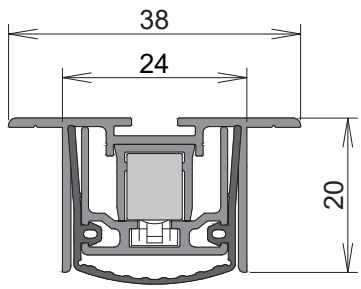
D8100B		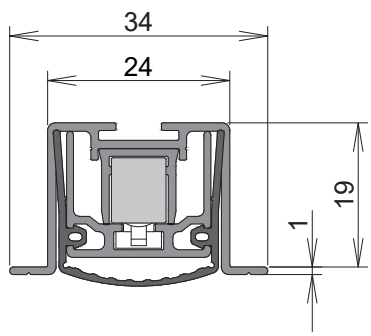

UL SEALS

ITEM CODE: DE8100 & DE8100ST SERIES
DOOR AUTOMATIC CONCEALED SILICONE SELF-EXTINGUISHING SEALS

Features:

- Area of application: Metal, wood or PVC doors.
- For commercial and residential buildings.
- A highly efficiency mechanism that lifts the seal clear of the floor as soon as the door by a few millimeters.
- Used to seal the gap at the bottom of your door to prevent infiltration of sound (tested to STC30), lights, draught, insects, moisture and smoke.
- UL LISTED. Non handed.
- Available lengths and cut back: Check table.
- Aluminum profile/section. Seal material: Silicone. Supplied with fixing screws. Available finish: Silver anodized aluminium.

SIZE	MAXIMUM CUT BACK
430mm	270mm
530mm	405mm
630mm	505mm
730mm	605mm
830mm	705mm
930mm	805mm
1030mm	905mm
1130mm	1005mm
1230mm	1105mm
1330mm	1205mm

ITEM CODE	SIZE	
DE8100		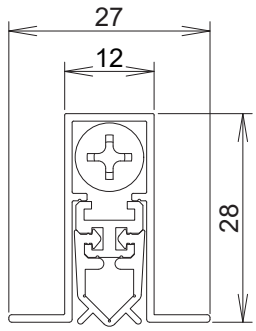
DE8100ST		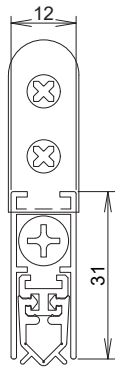

UL SEALS

ITEM CODE: DSF8100 SERIES
DOOR AUTOMATIC SURFACE MOUNTED
BOTTOM SILICONE SELF-EXTINGUISHING SEALS

Features:

- Area of application: Metal, wood or PVC doors.
- For commercial and residential buildings.
- A highly efficiency mechanism that lifts the seal clear of the floor as soon as the door by a few millimeters.
- No lateral travel during actuation enhaces gasket position.
- Actuator requires no protective press plate for the frames.
- Used to seal the gap at the bottom of your door to prevent infiltration of sound (tested to STC50),lights, draught, insects, moisture and smoke.
- UL LISTED. Non handed. Tool free single sliding actuator can be deactivated before building occupancy.
- Retracts parallel when the door opens/closes to minimize friction with the floor. Self-levelling for uneven floors.
- Available lengths and cut back: Check table.
- Aluminum profile/section. Seal material: Silicone. Supplied with fixing screws. Available finish: Silver anodized aluminium.

SIZE	MAXIMUM CUT BACK
435mm	320mm
535mm	360mm
635mm	480mm
710mm	585mm
805mm	635mm
930mm	760mm
1055mm	885mm
1210mm	1010mm
1335mm	1135mm
1435mm	1260mm
1550mm	1385mm
1650mm	1510mm
1750mm	1650mm
1800mm	1635mm
1850mm	1760mm
1900mm	1760mm
2000mm	1885mm

ITEM CODE	SIZE	
DSF8100		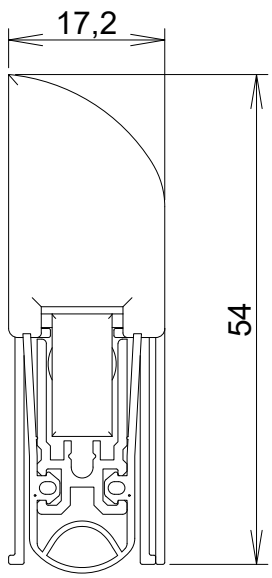

UL SEALS

ITEM CODE: D8100W SERIES

DOOR AUTOMATIC CONCEALED BOTTOM SILICONE SELF-EXTINGUISHING SEALS

Features:

- Area of application: Timber doors.
- Suitable for commercial and residential buildings.
- High-efficiency mechanism that automatically lifts the seal clear of the floor by a few millimeters as soon as the door opens.
- Seals the gap at the bottom of the door to prevent the ingress of sound, light, draughts, insects, moisture, and smoke.
- UL listed. Non-handed. Tool-free single sliding actuator that can be deactivated prior to building occupancy.
- Retracts parallel during door opening and closing to minimize friction with the floor. Self-leveling to accommodate uneven floors. Overload protection prevents excessive seal wear.
- Available lengths: 235, 320, 335, 435, 535, 635, 735, 835, 935, 1,035, 1,135, 1,235, 1335, 1435, 1535 and 1,635 mm.
- Shortening of standard lengths: Refer to table.
- Aluminum profile/section. Seal material: silicone. Supplied with fixing screws. Available finish: silver anodized aluminum.



LENGTH/MM	MAX. CUTTING BACK/MM (NON-ACTUATOR SIDE)	NEW LENGTH
235	ZERO	
320	85	235
335	15	320
435	115	320
535	170	365
635	150	485
735	150	585
835	200	635
935	175	760
1035	150	885
1135	125	1010
1235	100	1135
1335	200	1135
1435	175	1260
1535	150	1385
1635	125	1510

UL SEALS

ITEM CODE: DE8100ST SERIES

DOOR AUTOMATIC CONCEALED BOTTOM SILICONE SELF-EXTINGUISHING SEALS

Features:

- Area of application: Timber doors.
- Suitable for commercial and residential buildings.
- High-efficiency mechanism that automatically lifts the seal clear of the floor by a few millimeters as soon as the door opens.
- Seals the gap at the bottom of the door to prevent the ingress of sound, light, draughts, insects, moisture, and smoke.
- UL listed. Non-handed. Tool-free single sliding actuator that can be deactivated prior to building occupancy.
- Retracts parallel during door opening and closing to minimize friction with the floor. Self-leveling to accommodate uneven floors. Overload protection prevents excessive seal wear.
- Available lengths: 235, 270, 330, 430, 530, 630, 730, 830, 930, 1,030, 1,130, 1,230 and 1,330 mm.
- Shortening of standard lengths: Refer to table.
- Aluminum profile/section. Seal material: silicone. Supplied with fixing screws. Available finish: silver anodized aluminum.

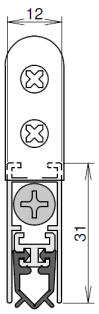



LENGTH/MM	MAX. CUTTING BACK/MM (NON-ACTUATOR SIDE)	NEW LENGTH
235	ZERO	
270	35	235
330	60	270
430	160	270
530	125	405
630	125	505
730	125	605
830	125	705
930	125	805
1030	125	905
1130	125	1005
1230	125	1105
1330	125	1205

UL SEALS

ITEM CODE: DCS1X1XA SERIES
FIRE RESISTANT BATWING SEALS

Features:

- Area of application: For wooden or metal doors.
- Material: Self-adhesive flexible elastomeric inserts in PVC base with backing tape batwing seals.
- Available lengths: 2200, 2500 and 3000 mm. Optional 2100 and 2400 mm.
- UL LISTED.
- Retrofit.
- Tested to STC51+.
- Standard finish: Black. Optional finishes, Dark brown, White and Grey.



ITEM CODE	SIZE
DCS1010A	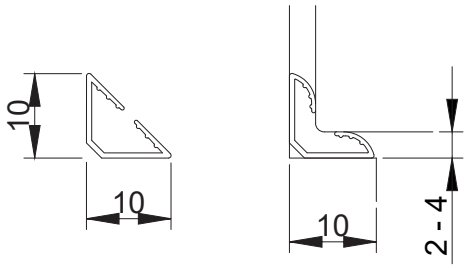
DCS1212A	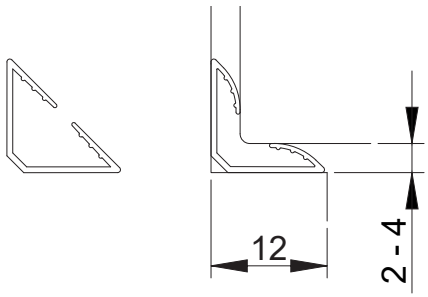
DCS1515A	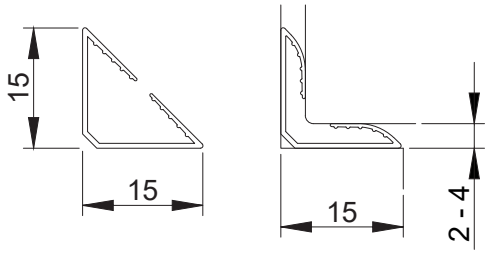

ITEM CODE: DCS118 SERIES
FIRE RESISTANT SILICONE SEALS

Features:

- Area of application: For wooden or metal doors.
- Material: Extruded self-extinguishing and non-toxic fire silicone seals.
- Self adhesive backing tape. Extremely low closing force.
- Available length 204 feet (62 meters). Optional 25 ,21 ,17 and 510 feet.
- UL LISTED.
- Tested to STC+51
- Category J Gasket.
- Standard finish: Black. Other finishes are available upon request.

DIMENSIONS	DCS118
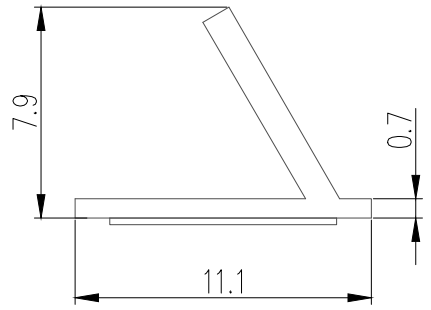	

ITEM CODE: DS88BB SERIES
FIRE RESISTANT SILICONE SEALS

Features:

- Area of application: For wooden or metal doors.
- Material: Extruded self-extinguishing and non-toxic fire silicone seals.
- Self adhesive backing tape.
- Available length 50 meters.
- Designed to seal gaps between 2 mm – 5.5 mm between the door leaf and frame.
- UL LISTED.
- Tested to STC51+
- Category H Gasket.
- Standard finish: Black. Other finishes are available upon request.

DIMENSIONS	DS88BB
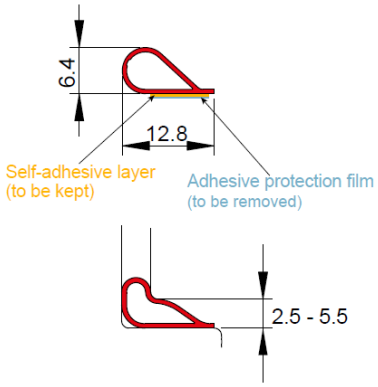	

ITEM CODE: DKS1718

FIRE RESISTANT KERF GROOVE SILICONE SEALS

Features:

- Area of application: For wooden or metal doors.
- Material: Self-extinguishing and non-toxic fire silicone seals.
- Category H gasket.
- Available length 25 meters/coil.
- UL LISTED.
- Standard finish: Grey. Black and White are available upon request.

DIMENSIONS	DKS1718
