FOR UL LISTED DOORS

INTRODUCTION

- THIS DEVICE IS SUITABLE FOR FIRE AND SMOKE DOOR WHICH IS STEEL OR TIMBER, FIRE RATED 180 MINUTES.
- THIS DEVICE IS BHMA CERTIFIED, GRADE 1.
- AS PER NFPA STANDARD:
  THE 842MM FULL LENGTH (PUSH BAR 535 MM) IS FOR LEAF WIDTH MEASURING MINIMUM 721 - MAXIMUM 1070MM.
  THE 1147MM FULL LENGTH (PUSH BAR 675 MM) IS FOR LEAF WIDTH MEASURING MINIMUM 861- MAXIMUM 1350 MM.
- THE LEAF MUST WEIGHT NOT MORE THAN 200KG AND BE MOUNTED IN A GOOD-QUALITY FRAME.
- THIS DEVICE MUST BE FITTED BY COMPETENT PERSON.
- IF THE DOOR IS FITTED WITH A OUTSIDE TRIM WHICH ALLOWS YOU TO OPERATE IT FROM THE OUTSIDE, REFER TO THE TEMPLATE PROVIDED WITH THE OUTSIDE TRIM.

CAUTION

THE SAFETY FEATURES OF THIS PRODUCT ARE ESSENTIAL TO ITS COMPLIANCE WITH UL10C. NO MODIFICATION OF ANY KIND, OTHER THAN THOSE DESCRIBED IN THESE INSTRUCTIONS, IS PERMITTED. OUTSIDE TRIM IS SOLD SEPARATELY.

FOR EN FIRE RATED DOORS ON ESCAPE ROUTE

3	7	6	B	1	3	2	2	B	A

WARNING

- THE SAFETY FEATURES OF THIS PRODUCT ARE ESSENTIAL TO ITS COMPLIANCE WITH EN 1125.
- NO MODIFICATION OF ANY KIND, OTHER THAN THOSE DESCRIBED ON THE INSTALLATION INSTRUCTIONS, IS PERMITTED OR ALLOWED.
- PANIC DEVICES MANUFACTURED IN ACCORDANCE WITH EN1125 WILL PROVIDE A HIGH DEGREE OF SAFETY AND REASONABLE SECURITY, PROVIDED THEY ARE FITTED TO DOORS AND FRAMES OF EQUAL QUALITY AND IN GOOD CONDITION. THE DOOR MUST BE CORRECTLY HUNG AND FREE FROM BINDING.

IMPORTANT

- THIS DEVICE MUST BE INSTALLED BY A SKILLED FITTER. IF THE FIXING INSTRUCTIONS ARE NOT FOLLOWED CORRECTLY, THEN NO RESPONSIBILITY FOR THE FIXING INSTRUCTIONS MUST BE PASSED TO DURABLE COLLECTION LTD AFTER INSTALLATION HAS BEEN COMPLETED.

DOOR SIZES

- THIS PRODUCT IS SUITABLE FOR DOORS UP TO 2500MM HEIGHT AND UP TO 1166MM WIDTH.(DOORS ABOVE 2500MM ARE OUT OF SCOPE OF EN1125).
- AS PER EN 1125 STANDARD:
  THE 842MM FULL LENGTH (PUSH BAR 535 MM) IS FOR LEAF WIDTH MEASURING MINIMUM 721- MAXIMUM 892MM.
  THE 1147MM FULL LENGTH (PUSH BAR 675 MM) IS FOR LEAF WIDTH MEASURING MINIMUM 861- MAXIMUM 1125 MM.

MAINTENANCE

- IT IS RECOMMENDED THAT THE FOLLOWING ROUTINE MAINTENANCE SITE INSPECTION BE UNDERTAKEN AT EQUAL INTERVALS OF NOT LESS THAN ONE MONTH BY THE OCCUPIER OR HIS APPROVED REPRESENTATIVE:
  A) INSPECT AND OPERATE THE PANIC DEVICE TO ENSURE THAT ALL COMPONENTS ARE IN A SATISFACTORY WORKING CONDITION;
  B) ENSURE THAT THE KEEPER IS FREE FROM OBSTRUCTION.

CAUTION

- THE SAFETY FEATURES OF THIS PRODUCT ARE ESSENTIAL TO ITS COMPLIANCE WITH UL10C. NO MODIFICATION OF ANY KIND, OTHER THAN THOSE DESCRIBED IN THESE INSTRUCTIONS, IS PERMITTED. OUTSIDE TRIM IS SOLD SEPARATELY.

MODELS # :
D301 SS-CE/UL-535MM
D301 ST-CE/UL-535MM

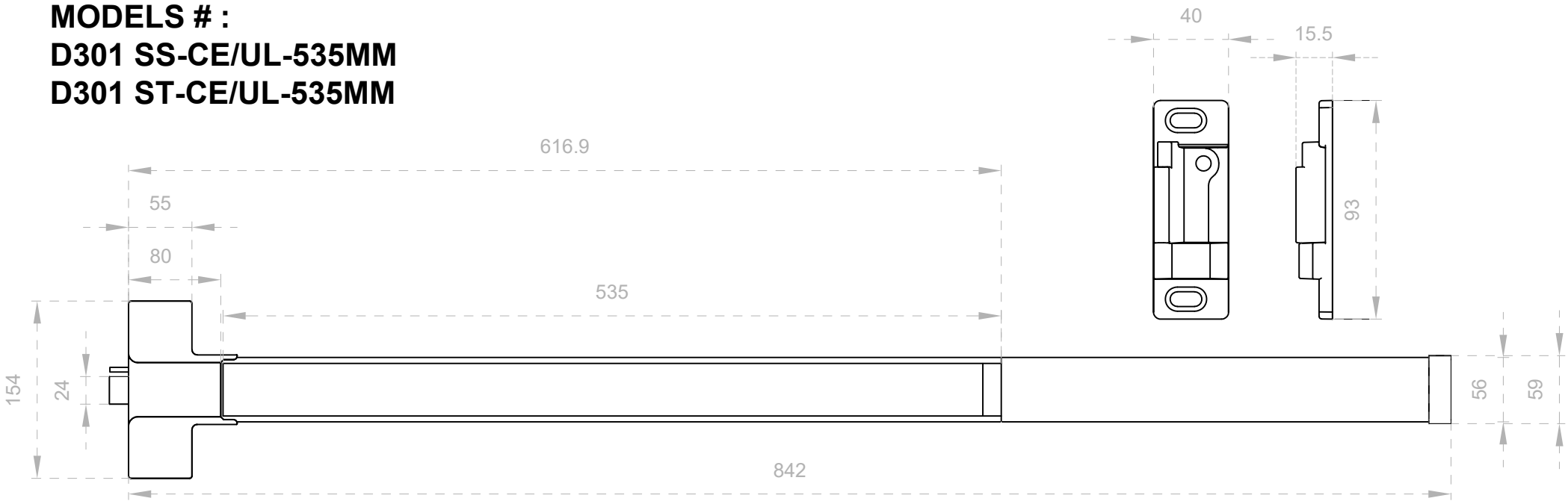

MODELS # :
D301 SS-CE/UL-675MM
D301 ST-CE/UL-675MM

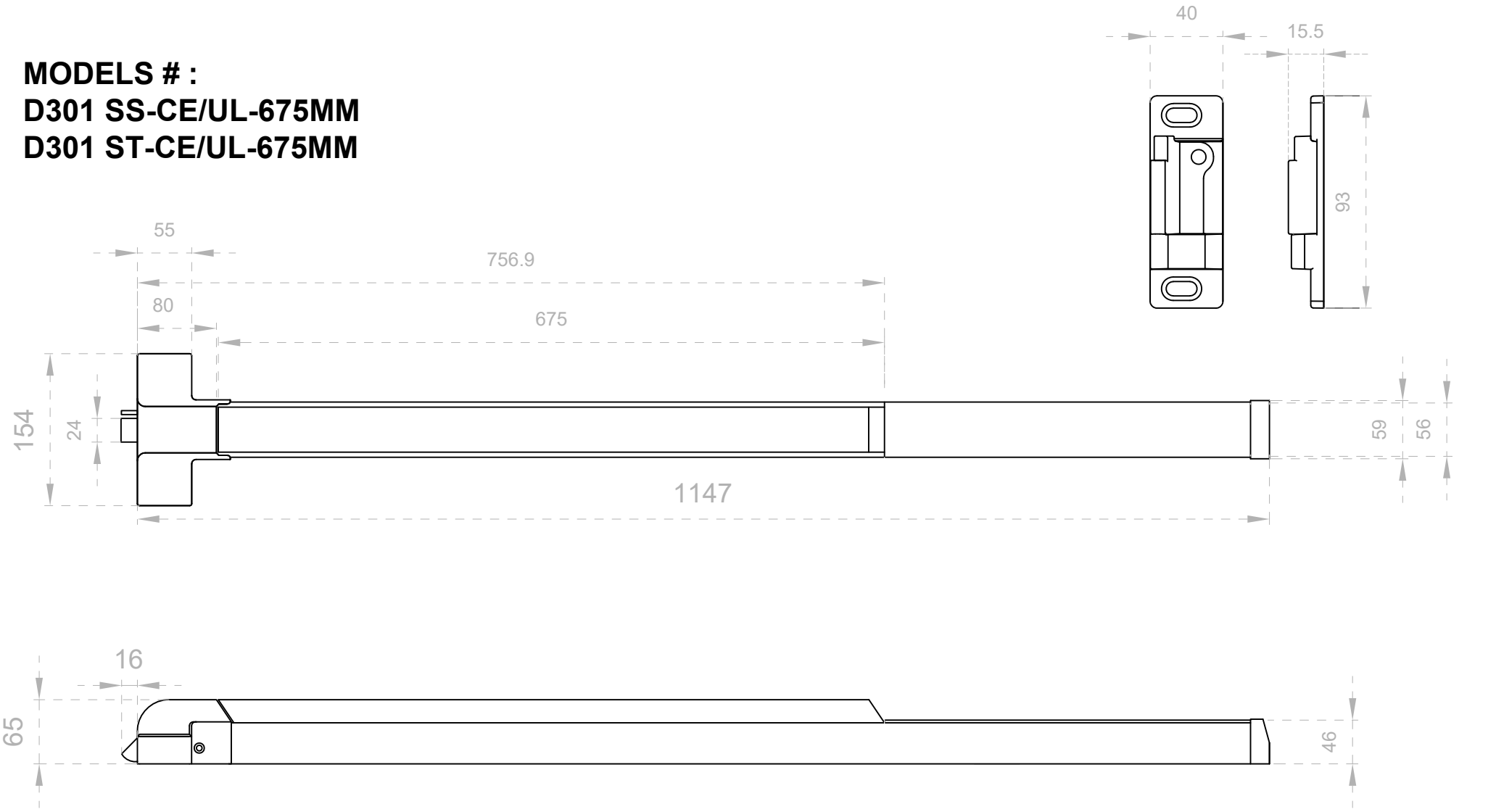

INSTALLATION INSTRUCTIONS OF RIM TYPE (TYPE 1) PANIC EXIT DEVICE

D301 SS SERIES OR D301 ST SERIES ARE UNIVERSAL

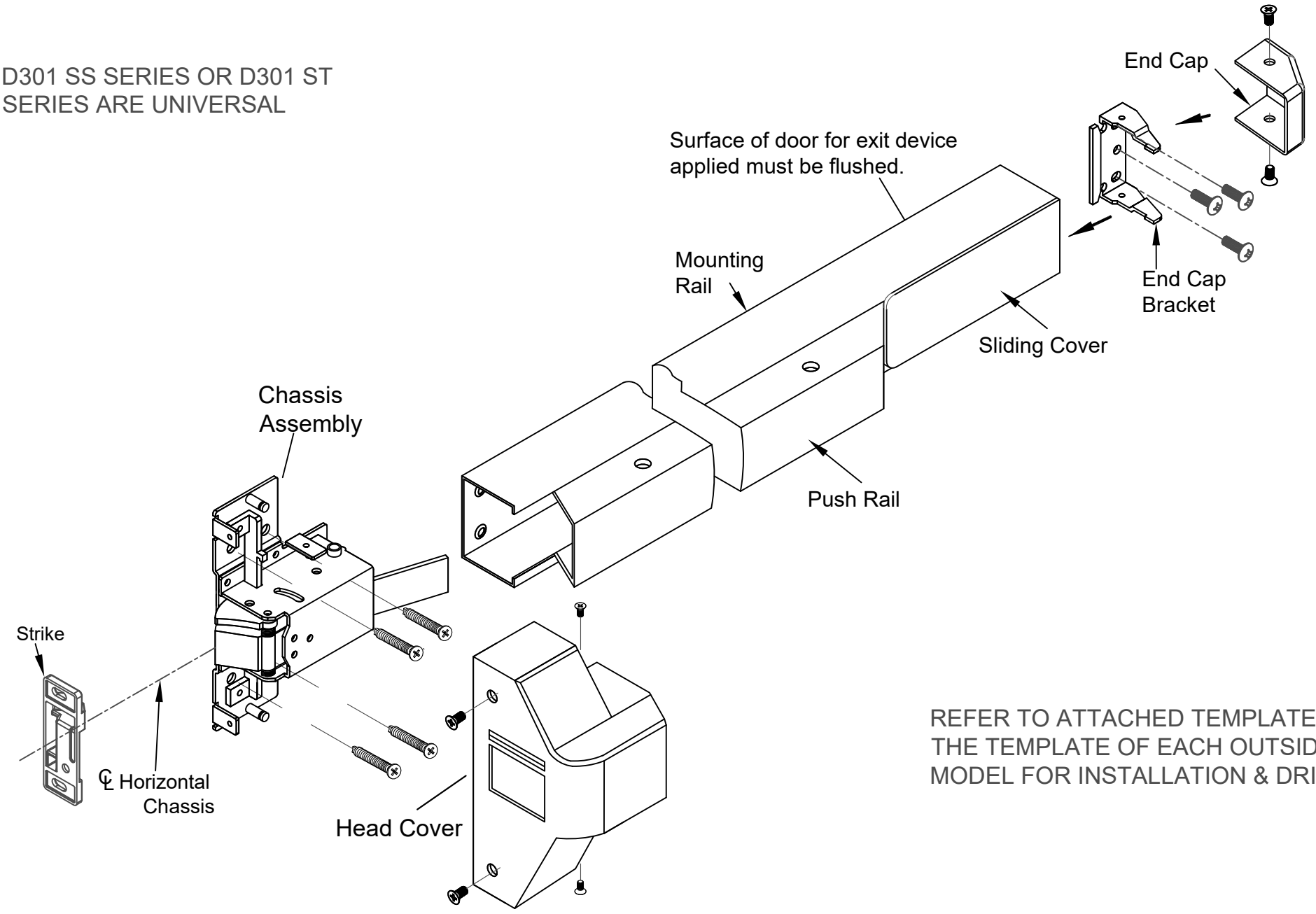

REFER TO ATTACHED TEMPLATE OR THE TEMPLATE OF EACH OUTSIDE TRIM MODEL FOR INSTALLATION & DRILLING

1. DOOR LAYOUT

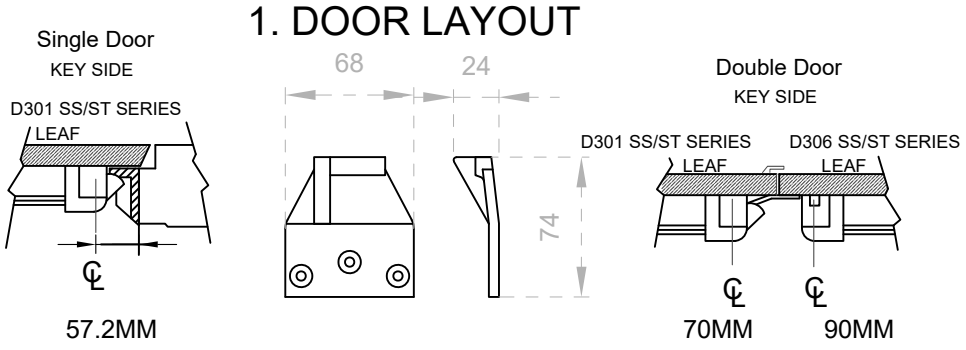

DOOR MUST BE FITTED AND HUNG PROPERLY BEFORE PROCEEDING.
MARK VERTICAL ℄ AND HORIZONTAL ℄ ON DOOR AND FRAME.

TAPE ATTACHED DRILLING TEMPLATE ON DOOR USING VERTICAL ℄ & HORIZONTAL ℄

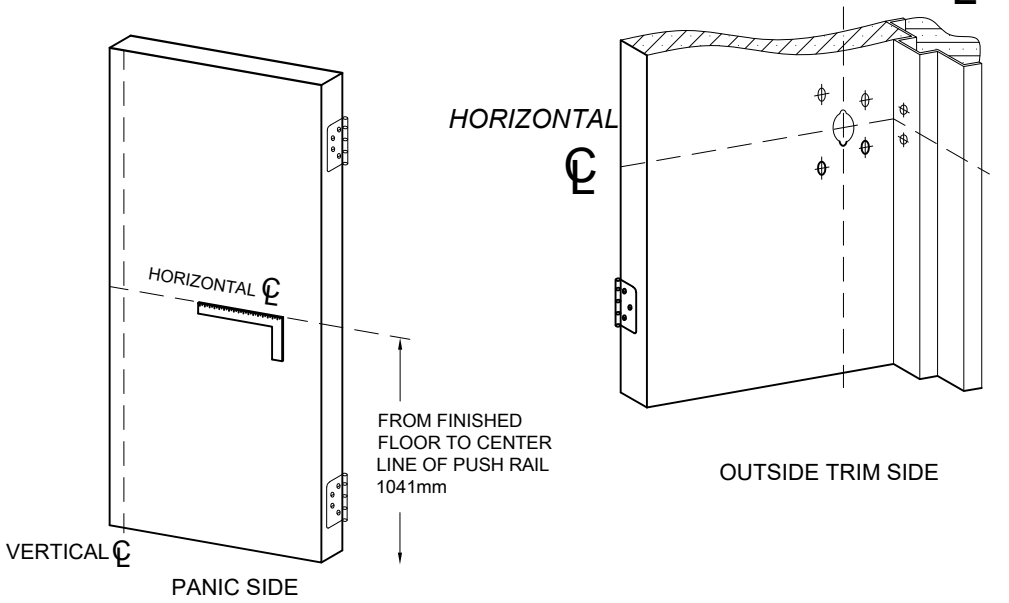

2. Install Exit Device on the door

CHECK THE DEVICE SIZE TO DETERMINE IF CUTTING IS REQUIRED. DETERMINE THE CUT-OFF LENGTH "X" BY SUBTRACTING 44.45MM FROM "Y"

FOR DOORS WITH STILE, THE CUT-OFF MUST LEAVE A MINIMUM OVERLAP OF 12.7MM WITH THE RAIL.

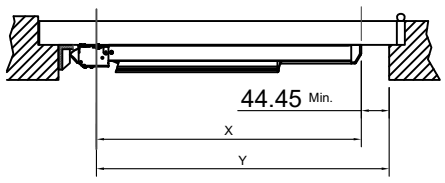

A. REMOVE THE HEAD COVER AND PLACE THE DEVICE HORIZONTALLY ON THE DOOR.
B. INSTALL THE MOUNTING SCREWS ON THE CHASSIS, BUT DO NOT TIGHTEN THEM AT THIS STAGE.
C. INSTALL THE BRACKET WITH SCREWS. ENSURE THE DEVICE REMAINS HORIZONTAL, THEN TIGHTEN ALL SCREWS.

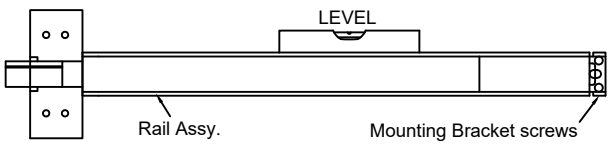

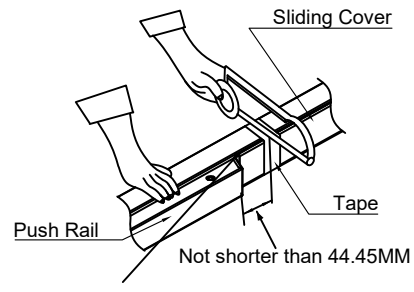

Ensure 0.79MM MAX. gap between Sliding Cover and Push Rail end.

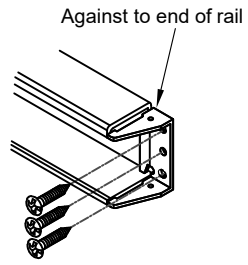

3. Install Strike (refer to TEMPLATE), Head Cover, & End Cap

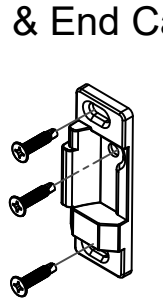

Rim Strike

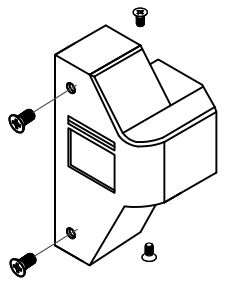

Head Cover

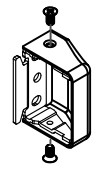

End Cap

TEMPLATE OF D301 SERIES (TYPE 1)/D306 SERIES (TYPE 2) W/ OVERLAPPING STRIKE SPD159

VIEW FROM PANIC SIDE

PLEASE PRINT OUT AT ACTUAL SIZE, DO NOT SCALE TO FIT.

FOLD HERE FROM DOOR EDGE

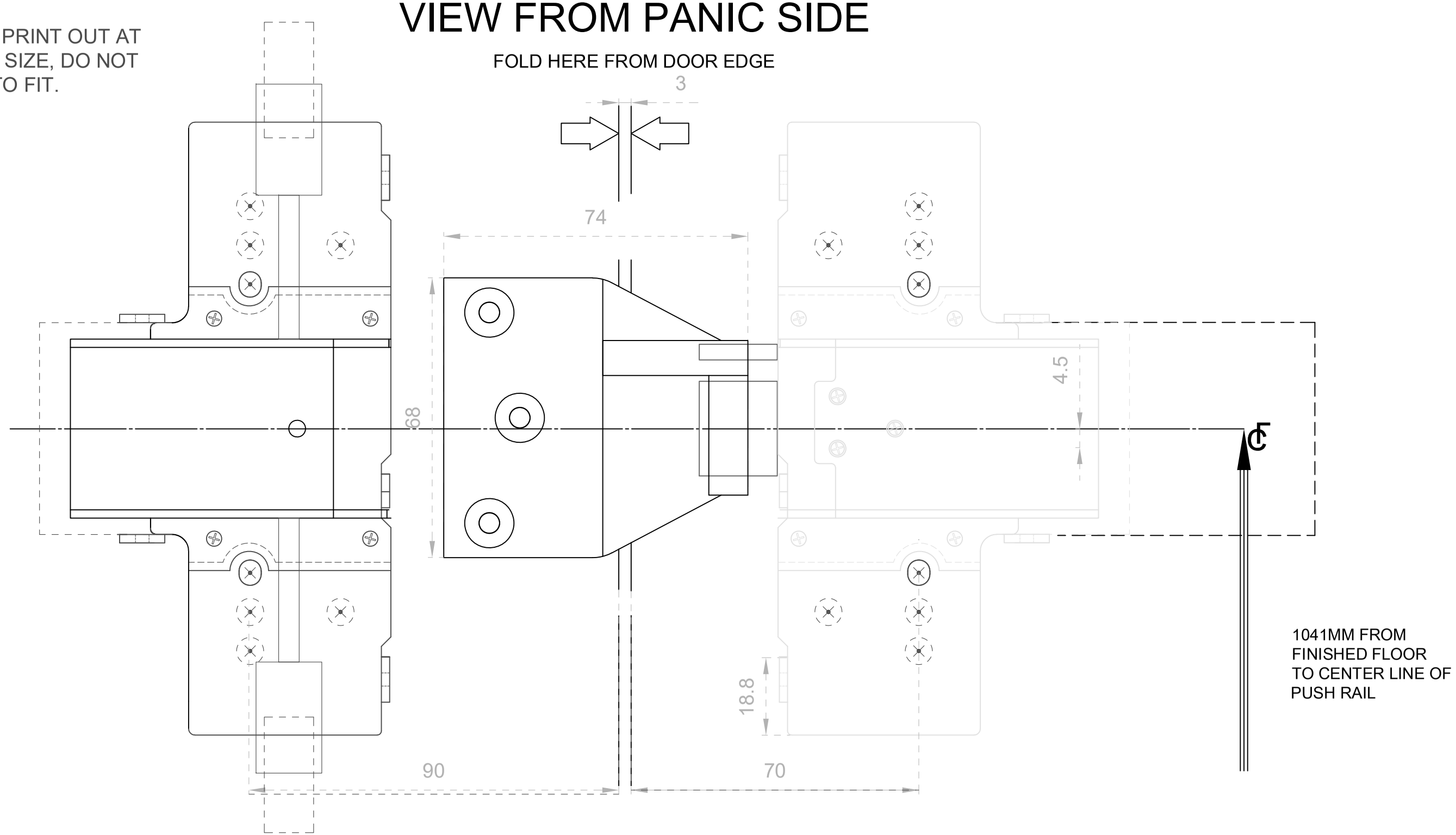

D306 SS/ST SERIES

D301 SS/ST SERIES

VIEW FROM OUTSIDE TRIM SIDE

PLEASE PRINT OUT AT ACTUAL SIZE, DO NOT SCALE TO FIT.

